WHILL

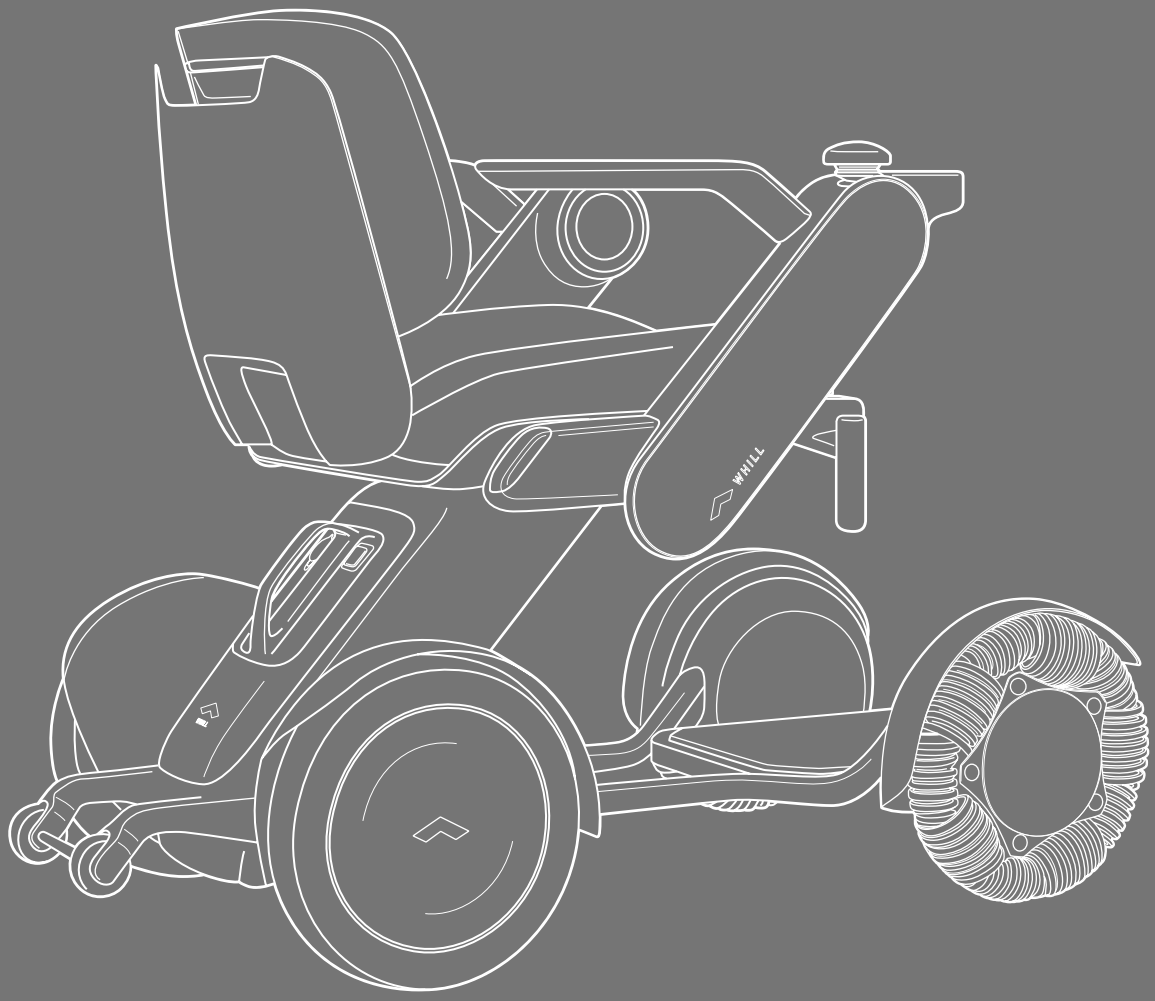

User Manual

WHILL Model C2

en

Introduction

Thank you for your purchase of the WHILL Model C2. This device is intended to provide outdoor and indoor mobility to individuals who are comfortable with operating a powered wheelchair.
This user manual is intended for users of this device and instructs how to safely operate the device. It also explains the basic adjustments, inspections, troubleshooting, and the basic maintenance procedures to be performed by the user. This manual can also be used by distributors, sales staff, and others in order to gain a detailed understanding of the main functions. WHILL is dedicated to ensuring the safety, comfort, and convenience of the users. Please read this manual carefully before use, and be sure to use the device correctly and safely. Store this manual in a location where it can be referred to whenever needed.

- This manual contains information that is protected by patent rights and copyrights. It may not be reproduced in part or in whole without explicit written permission from WHILL.
- The contents of this manual may be changed at any time without notice. For the latest information about the device, visit the WHILL Website (https: //whill.inc).
- Use of this device in ways not defined in this manual may result in damage to the device. Please contact your distributor or customer support if you notice any inaccuracies or omissions in this manual.

Intended Purpose:
The intended use of the WHILL Model C2 powered wheelchair is to provide mobility to individuals who are comfortable with operating a powered wheelchair. Its usage may vary depending on the countries and areas.

Manual overview

The symbols used throughout this manual are described below. Be sure to observe the instructions indicated by each symbol.

Symbol	Description
 WARNING	Indicates critical instructions to prevent an imminently hazardous situation that may result in death or serious injury.
 CAUTION	Indicates instructions to prevent a potentially hazardous situation that may result in minor injury, property damage or both.

	Indicates a required act.
	Indicates a prohibited act.

	Indicates precautions or reference information that must be read in order to prevent device malfunctions or failures, and to ensure comfortable device use.

WHILL

Contents

Introduction 1

Manual overview 2

1. Safety precautions 6
    1.1. EMI (Electromagnetic Interference) 10
        1.1.1. General Q&A on EMI and RFI 11
        1.1.2. Important information regarding Electro Magnetic Compatibility (EMC) 11
        1.1.3. FCC and ISED information 14
    1.2. Labels on the device 16
    1.3. Reporting of serious incident 16
2. About the device 18
    2.1. Packaged items 18
    2.2. Names and functions of parts 18
    2.3. Accessories 21
3. Charging the battery 22
    3.1. Battery and charger components 24
    3.2. Charging procedure 25
        3.2.1. Charging with the battery installed in the device 27
        3.2.2. Charging with the battery removed 29
        3.2.3. Charger indicator displays 32
4. Operating procedures 34
    4.1. Inspection before getting in the device 35
    4.2. Getting in the device 36
        4.2.1. Accessing the seat from the front 38
        4.2.2. Accessing the seat from the side 39
    4.3. Fastening the lap belt* 41
        4.3.1. Removing the lap belt 41
    4.4. Turning on the power 42
        4.4.1. Checking the battery charge level 43
        4.4.2. Adjusting the speed 43
        4.4.3. Using the sound button 43
    4.5. Driving 44
        4.5.1. Moving forward and backward 47
        4.5.2. Moving in a diagonal direction 47

4.5.3. Turning 48
4.5.4. Stopping 48
4.5.5. Controlling the speed 49
4.5.6. Driving under different road conditions 50
4.6. Releasing the brakes 51
4.6.1. Release procedure 51
4.7. Carrying items 52
4.8. Using the smart key* 54
4.8.1. Locking 54
4.8.2. Unlocking 55
5. Assembly, adjustment, and disassembly 56
5.1. Component list 56
5.2. Assembly procedures 58
5.2.1. Assembling the front drive base and rear drive base 59
5.2.2. Installing the storage basket* 60
5.2.3. Installing the seat assembly 61
5.2.4. Installing the battery 64
5.3. Adjustment procedures 65
5.3.1. Adjusting the arm length 66
5.3.2. Switching the position of the control pad 68
5.3.3. Adjusting the seat height 75
5.3.4. Adjusting the back support height 78
5.3.5. Adjusting the back support angle 80
5.4. Disassembly procedures 83
5.4.1. Removing the battery 84
5.4.2. Removing the seat assembly 85
5.4.3. Removing the storage basket 87
5.4.4. Removing the front drive base 88
6. Storage and transport methods 90
6.1. Storage 90
6.2. Transport 91
6.2.1. How to hold each component 92
7. About the smartphone app 94
8. Maintenance and inspection 96
8.1. Cleaning, disinfection and user maintenance 96
8.2. Replacing the smart key battery 97

8.3. Reinstalling the joystick 99
8.4. Inspection 100
8.5. Repair, maintenance, and parts replacement performed by the manufacturer or distributor 100
8.6. Disposal 100
8.7. About warranty information 100
8.8. Reuse information 101
8.9. How to find manufacturing month and year of WHILL Model C2 device 101
9. Troubleshooting 104
10. Specifications and test results 106
10.1. Specifications 106
10.2. Dimensions and test results 108
Symbols 110
Index 111
Contact information 113

* Sold separately. Equipped with standard items depending on the area/countries.

1. Safety precautions

Complete attention to safety has been given in the design of the device. However, injury or damage is possible if the device is used incorrectly or if precautions are ignored.

The descriptions related to safety utilize the terms "WARNING" and "CAUTION" to indicate the degree of injury or damage and the level of danger. "WARNING" is critical instructions to prevent an imminently hazardous situation that may result in death or serious injury. "CAUTION" is instructions to prevent a potentially hazardous situation that may result in minor injury or property damage or both.

The WHILL Model C2 is a mobility vehicle. Be sure to correctly understand the contents of this manual before using the device. Persons who find it difficult to use a powered wheelchair should refrain from using the device. Pay attention to the following precautions when using and handling the device.

- **The device is designed for use on ordinary paved roads or indoor use.**
- **If this device is being operated by an assistant, the operator must carefully read this manual and fully understand the precautions before using it.**

1. For using the machine

⚠ WARNING

- **If the device shows any abnormal signs, immediately discontinue use, and contact the distributor or customer support.**
  Using the device in a less than perfect state can potentially cause an injury or accident.
- **Before use, check for any improperly assembled, missing or broken components, and check that the brakes are locked.**
  There is a risk of injury or accident. If components need to be replaced or repaired, stop using the device immediately and contact your distributor.
- **Carefully read the explanations in this manual regarding the battery and charger, and follow the instructions.**
  There is a risk of fire or battery explosion when disassembling the battery or charger. Do not allow flames near the battery or charger, avoid getting the battery and charger wet or subjecting them to impact (dropping, penetration with nails, or standing on them), etc.
- **Persons who have an implanted pacemaker, implanted defibrillator, or other electrical medical devices on their bodies, must leave a minimum of 8 inches (20 cm) between themselves and the magnetic connectors.**



  The magnetic connectors are located at the connection between the seat assembly and rear drive base. The magnetism of the magnetic connectors may have an adverse effect on electrical medical devices.
- **Unsafe in the Magnetic Resonance (MR) Environment.**
  The WHILL Model C2 is MR Unsafe. The device presents a projectile hazard.



- **Turn off the device power when not operating.**
  There is a risk of accidental contact with the control pad that could cause unexpected movement of the device.
- **The maximum load weight for this device is 300 lb (approx. 136 kg). It includes both the occupant and any luggage. Use the device without subjecting it to a load higher than this limit.**
  There is a risk of damaging the device.

⚠ WARNING

- **Do not sit on the control pad, place the removed seat assembly upside down, or apply an excessive load to the control pad. Do not press the control pad or switches with excessive force or operate them with a sharp object.**
  There is a risk that the control pad or switches may be damaged, rendering the device inoperable.
- **Do not jump onto the foot rest, stand on the foot rest while carrying a heavy object, or place an excessive load on the foot rest.**
  There is a risk of the device lifting up and tipping.
- **Do not ride on the anti-tip bar.**
  The device may lose its anti-tipping functionality if the anti-tip bar is deformed. Contact your distributor for replacement if it is deformed.
- **Do not apply stickers or paint onto the tail lights, switches, display, or labels.**
  There is a risk that these components may not be visible, resulting in incorrect operation and accident.
- **Do not hoist the device when there is a person on the device.**
  There is a risk of falling or tipping over.
- **Do not use the device as a seat in an automobile or other vehicle.**
  There is a risk of damage to the device, causing an accident.
  The symbol on the right indicates that the device is not intended to be used as a seat in a motor vehicle.



⚠ CAUTION

- **If the device is not used for a long period, ensure the battery is fully charged before storing. Charge the battery at least once a month.**
  There is a risk that the battery may get excessively depleted and cannot be charged.
- **Disassemble the device before lifting it. Hold the part specified in this manual and be careful of the weight when lifting each component.**
  There is a risk of injury to the user and damage to the device.
- **Take note of the surface temperature of the device when using the device.**
  The surface temperatures of the device can increase/decrease extremely when exposed to external sources of heat or cold.

2. When getting in the device and driving the device

1

⚠ WARNING

- **Turn off the device power when getting in and out of the device.**
  There is a risk of unexpected movement of the device caused by accidental contact with the control pad.
- **When driving, fully check the surroundings and road conditions. Drive carefully at low speed particularly when driving in locations crowded with people, close to walls or other locations where there are obstacles nearby, and in narrow places or on uneven surfaces or slopes.**
  There is a risk accidents may occur. When driving on wet inclines, there is a risk that the device may lose stability. Pay close attention when driving.
- **When driving at night or in places with poor visibility, check that the tail lights are visible to other people before using the device.**
  There is a risk of accident.
- **When approaching curbs, steps, slopes, and similar obstacles, approach at a 90° angle and drive over them carefully at low speed.**
  There is a risk of tipping over or deforming the drive base.
- **Lower the foot rest and keep your feet on the foot rest while driving.**
  There is a risk that your feet may become caught in moving components.
- **When stopping on a downhill slope, release the control pad early, and make sure that the device stops with an ample amount of extra space around it.**
  The stopping distance is longer when on a downhill slope. There is a risk that you may be unable to stop in the intended position, causing an accident.
- **Be sure to release the brakes only when on a flat surface and in emergencies after turning off the power. After moving the device manually with the brakes released, raise the brake release levers and lock the brakes.**
  There is a risk accidents may occur because the device will move freely when the brakes are released.

- **Do not drive the device in the following areas.**
  The device may tip over and there is a risk accidents may occur.
  - Escalators or stairs
  - Steps that are more than 2 inches (50 mm) high
  - Slopes with a gradient of 10° or more
  - Soft surfaces such as sand or mud
  - Snowy or frozen paths
- **Do not release the brakes and move the device manually except in emergencies.**
  There is a risk accidents may occur because the brakes do not work.
- **While riding the device, do not crouch down, lean out of the device, or exercise. Pay attention to the center of mass while driving.**
  There is a risk the device stability and balance will be affected. Request help from those around the device before reaching for inaccessible objects.
- **Do not drive while holding something in your hand or with something placed on your lap.**
  There is a risk of unintended movement of the device.

3. When assembling, adjusting, or disassembling

⚠ WARNING

- **Assemble the device in the described order in this user manual. Do not perform any disassembly, adjustment, repair, or modification that is not listed in this manual.**
  There is a risk of injury and product safety risk due to damage to the device or its parts.
  Performing repair or modification which is not listed in this manual will invalidate the warranty.
- **Perform assembly, adjustment, and disassembly on a flat and level surface with the battery removed and brakes locked.**
  There is a risk of accident.

- **Do not touch the connectors directly, allow them to become wet, or bring any metal or other foreign objects close to them. Ensure that there are no foreign objects when assembling.**
  There is a risk of injury or electric shock as well as damage to the device or its components.

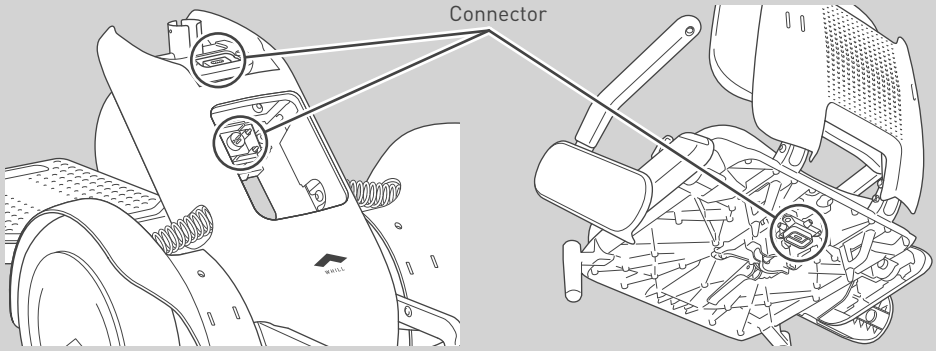

- **Do not press a sharp object against or apply a load to the cables.**
  The damaged cable may cause malfunctions or unexpected device operation.

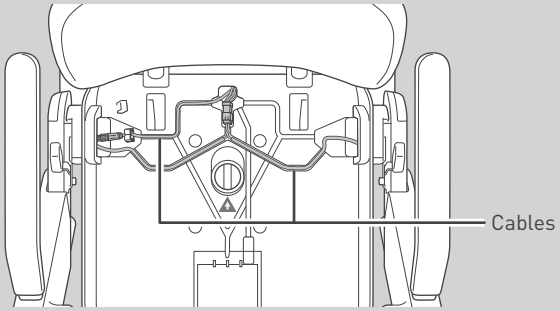

1.1. EMI (Electromagnetic Interference)

There is a risk of unintended movement of this device as a result of radio waves. Avoid driving in an area where strong electromagnetic waves are generated such as areas around high-tension wires, television towers, etc. Radio waves may interfere with the control functions of this device.

The device may also emit its own electromagnetic fields and may disturb the operation of other nearby devices.

To reduce the chance of unintended device movement, which could result in serious injury, pay careful attention to the following instructions.

- Do not operate hand-held transceivers (transmitters receivers), such as citizens band (CB) radios, or turn on personal communication devices, such as cellular phones, while the device is turned on;
- Look for nearby transmitters, such as radio or TV stations, and try to avoid coming close to them;
- Be aware that adding accessories or components, or modifying the device, may make it more susceptible to EMI.

If the device moves or stops when the device controller is not operated, or if the device operates in a way different than intended, take the following actions.

- Turn off the device as soon as it is safe.
- Record the controller operation that was being performed at that time.
- Record the device operation that could not be activated using the controller.
- Record the mobile phones and other electronic devices that may be sources of radio waves and were near the device.

Based on these notes, consider the possible cause of radio frequency interference and remove it. If the problem is still not resolved, consult with your distributor or customer support. At this time, keep your earlier notes at hand.



If radio frequency interference is suspected, turn off the power and disconnect the battery.

1.1.1. General Q&A on EMI and RFI

The following are general questions and answers regarding steps to avoid nearly all of the effects of EMI and RFI with this device. Please use them as reference.

● **Where do radio waves come from?**

Radio waves are emitted by unidirectional or bidirectional radio devices. Such devices include transceivers, mobile phones, wireless computer links, microwave generators, and radio call transmitters. Radio waves are a form of electromagnetic energy, and the strength of the energy increases at closer distances to the transmitting antenna. This electromagnetic field can cause problems for users of electric equipment.

● **What kind of movements should I expect if a mobility device is affected by EMI or RFI?**

EMI and RFI undergo extremely large dynamic changes and may affect a device depending on conditions such as the following.

- Radio wave frequency and strength
- Structure of the power supply equipment
- Inclination of the device (whether the ground is flat or a slanted)
- Whether the device is turned on and whether it is moving

If this device is affected, there is a possibility of abnormal movement. It may begin moving uncontrollably or stop suddenly. Strong EMI or RFI can damage the control system.

1.1.2. Important information regarding Electro Magnetic Compatibility (EMC)

Below cables information are provided for EMC reference.

Cable	Max. cable length, Shielded/unshielded		Number	Cable classification
AC Power Line	1.5 m	Unshielded	1 Set	AC Power
DC Power Line	1.2 m	Unshielded	1 Set	DC Power

This electrical medical equipment needs special precautions regarding EMC and put into service according to the EMC information provided in the user manual; The equipment conforms to this IEC 60601-1-2:2014 standard for both immunity and emissions. Nevertheless, special precautions need to be observed:

- The equipment is intended for use in the home healthcare environment.
- If the essential performance of the equipment is lost or degraded due to electromagnetic disturbances, unintended acceleration, stop, or control may occur.
- WARNING: Use of this equipment adjacent to or stacked with other equipment should be avoided because it could result in improper operation. If such use is necessary, this equipment and the other equipment should be observed to verify that they are operating normally.
- The use of accessories, transducers and cables other than those specified or provided by the manufacturer of this equipment could result in increased electromagnetic emissions or decreased electromagnetic immunity of this equipment and result in improper operation.

- WARNING: Portable RF communications equipment (including peripherals such as antenna cables and external antennas) should be used no closer than 30 cm (12 inches) to any part of the C2, including cables specified by the manufacturer. Otherwise, degradation of the performance of this equipment could result.
- WARNING: If the use location is near (e.g. less than 1.5 km from) AM, FM or TV broadcast antennas, before using this equipment, it should be observed to verify that it is operating normally to assure that the equipment remains safe with regard to electromagnetic disturbances throughout the expected service life.
- When the AC input voltage is interrupted, the equipment will stop battery charging and if the power supply restored, it could be recovered automatically, this degradation could be accepted because it will not lead to unacceptable risks and it will not result in the loss of basic safety or essential performance.

During all immunity tests, a digital tachometer was used to monitor the rotating speed of wheel and a clamp meter was used to monitor the output current of battery charger to verify the performance of EUT.

EMI Compliance Table (Table 1)

Table 1 - Emission

Phenomenon	Compliance	Electromagnetic environment
RF emissions	CISPR 11 Group 1, Class B	Home healthcare environment
Harmonic distortion	IEC 61000-3-2 Class A	Home healthcare environment
Voltage fluctuations and flicker	IEC 61000-3-3 Compliance	Home healthcare environment

EMS Compliance Table (Table 2-5)

Table 2 - Enclosure Port

Phenomenon	Basic EMC standard	Immunity test levels Home healthcare environment
Electrostatic Discharge	IEC 61000-4-2	±8 kV contact ±2 kV, ±4 kV, ±8 kV, ±15 kV air
Radiated RF EM field	IEC 61000-4-3	20 V/m 26 MHz-2.5 GHz 80% AM at 1 kHz 10 V/m 80 MHz-2.7 GHz 80% AM at 1 kHz
Proximity fields from RF wireless communications equipment	IEC 61000-4-3	Refer to table 3
Rated power frequency magnetic fields	IEC 61000-4-8	30 A/m 50 Hz or 60 Hz
Proximity magnetic fields	IEC 61000-4-39	30 kHz, CW, 8 A/m 134.2 kHz, pulse modulation 2.1 kHz, 65 A/m 13.56 MHz, pulse modulation 50 kHz, 7.5 A/m

Table 3 - Proximity fields from RF wireless communications equipment

Test frequency (MHz)	Band (MHz)	Immunity test levels Home healthcare environment
385	380-390	Pulse modulation 18 Hz, 27 V/m
450	430-470	FM, ±5 kHz deviation, 1 kHz sine, 28 V/m
710	704-787	Pulse modulation 217 Hz, 9 V/m
745		
780		
810	800-960	Pulse modulation 18 Hz, 28 V/m
870		
930		
1720	1700-1990	Pulse modulation 217 Hz, 28 V/m
1845		
1970		
2450	2400-2570	Pulse modulation 217 Hz, 28 V/m
5240	5100-5800	Pulse modulation 217 Hz, 9 V/m
5500		
5785		

Table 4 - Input a.c. power Port

Phenomenon	Basic EMC standard	Immunity test levels Home healthcare environment
Electrical fast transients/ burst	IEC 61000-4-4	±1 kV ±2 kV 100 kHz repetition frequency
Surges Line-to-line	IEC 61000-4-5	±0.5 kV, ±1 kV
Conducted disturbances induced by RF fields	IEC 61000-4-6	3 V, 0.15 MHz-80 MHz 6 V in ISM bands and amateur radio bands between 0.15 MHz and 80 MHz 80% AM at 1 kHz
Voltage dips	IEC 61000-4-11	0% U_T; 0.5 cycle At 0º, 45º, 90º, 135º, 180º, 225º, 270º and 315º
		0% U_T; 1 cycle and 70% U_T; 25/30 cycles Single phase: at 0º
Voltage interruptions	IEC 61000-4-11	0% U_T; 250/300 cycles

Table 5 - Signal input/output parts Port

Phenomenon	Basic EMC standard	Immunity test levels Home healthcare environment
Conducted disturbances induced by RF fields	IEC 61000-4-6	3 V, 0.15 MHz-80 MHz 6 V in ISM bands and amateur radio bands between 0.15 MHz and 80 MHz 80% AM at 1 kHz

1.1.3. FCC and ISED information

The control pad on the WHILL Model C2 contains the following wireless communication modules that are regulated by the FCC (Federal Communications Commission) and the ISED (Innovation, Science and Economic Development Canada).

- Model No: MDBT42Q-P192K
  FCC ID: SH6MDBT42Q
  IC: 8017A-MDBT42Q

The control pad is labelled with an FCC ID and an ISED certification number. The label is accessible without the use of tool by removing the control pad as shown in Section “Switching the position of the control pad”.

● **FCC Information**

This device complies with part 15 subpart B and C of the FCC rules. Operation is subject to the following two conditions.

(1) This device may not cause harmful interference.

(2) This device must accept any interference received, including interference that may cause undesired operation.

This equipment has been tested and found to comply with the limits for a Class B digital device, pursuant to part 15 of the FCC Rules. These limits are designed to provide reasonable protection against harmful interference in a residential installation. This equipment generates, uses, and can radiate radio frequency energy and, if not installed and used in accordance with the instructions, may cause harmful interference to radio communications. However, there is no guarantee that interference will not occur in a particular installation. If this equipment does cause harmful interference to radio or television reception, which can be determined by turning the equipment off and on, the user is encouraged to try to correct the interference by one or more of the following measures:

- Reorient or relocate the receiving antenna.
- Increase the separation between the equipment and receiver.
- Connect the equipment into an outlet on a circuit different from that to which the receiver is connected.
- Consult the dealer or an experienced radio/TV technician for help.

CAUTION: Changes or modifications not expressly approved by the manufacturer could void the user’s authority to operate this equipment.

This device meets the government’s requirements for exposure to radio waves. This device is designed and manufactured not to exceed the emission limits for exposure to radio frequency (RF) energy set by the Federal Communications Commission of the U.S. Government.

RF Exposure Warning

This equipment must be installed and operated in accordance with provided instructions and the antenna(s) used for this transmitter must be installed to provide a separation distance of at least 20 cm from all persons and must not be co-located or operating in conjunction with any other antenna or transmitter. End-users and installers must be provided with antenna installation instructions and transmitter operating conditions for satisfying RF exposure compliance.

● ISED Information

This Class B device complies with Canadian ICES-3 (B). This device contains licence-exempt transmitters/ receivers that comply with Innovation, Science and Economic Development Canada's license-exempt RSS(s). Operation is subject to the following two conditions: (1) This device may not cause interference. (2) This device must accept any interference, including interference that may cause undesired operation of the device.

Cet appareil numérique de la classe B est conforme à la norme NMB-3 (B) du Canada. L'émetteur/récepteur exempt de licence contenu dans le présent appareil est conforme aux CNR d'Innovation, Sciences et Développement économique Canada applicables aux appareils radio exempts de licence. L'exploitation est autorisée aux deux conditions suivantes : (1) L'appareil ne doit pas produire de brouillage; (2) L'appareil doit accepter tout brouillage radioélectrique subi, même si le brouillage est susceptible d'en compromettre le fonctionnement.

Radio Frequency (RF) Exposure Information

The radiated output power of the Wireless Device is below the ISED radio frequency exposure limits. The Wireless Device should be used in such a manner such that the potential for human contact during normal operation is minimized.

This device has been evaluated for and shown compliant with the ISED Canada RF Exposure limits under mobile exposure conditions (antennas are greater than 20 cm from a person's body).

Informations concernant l'exposition aux fréquences radio (RF)

La puissance de sortie émise par l'appareil sans fil est inférieure à la limite d'exposition aux fréquences radio d'ISDE Canada. Utilisez l'appareil sans fil de façon à minimiser les contacts humains lors du fonctionnement normal.

Ce dispositif a été évalué et démontré conforme aux limites d'exposition aux RF d'ISDE Canada dans des conditions d'exposition à des appareils mobiles (antennes sont supérieures à 20 cm à partir du corps d'une personne).

1.2. Labels on the device

Warning labels are attached on the area where there are possible hazards. Also, labels indicate the important information for using the device such as the device information, lock and unlock positions of levers, etc.
There may be additional labels not described in this manual depending on the sales area or model.

⚠ CAUTION



- **Do not remove the labels.**
  The labels contain important information.

1.3. Reporting of serious incident

Any serious incident that has occurred in relation to the device shall be reported immediately to WHILL and the competent authority in which the user is located. Refer to “Contact information”.

2. About the device

2.1. Packaged items

The packaged device contains the following items. Before using the device, be sure to check that there are no missing items or damaged parts on the device. If the device is defective, there are shipping damages, any item is missing, or the packaging was unintentionally opened, do not use the device and contact the distributor or customer support.

- WHILL Model C2
- Charger
- Lap belt (Sold separately. Equipped with standard items depending on the area/countries.)
- Battery
- Smart key (if purchased)
- Storage basket (if purchased)
- User manual (this manual)
- Pocket reference [Provided in paper depending on the area/countries]

Be careful not to scratch the exterior of the device when opening the packages.

2.2. Names and functions of parts

■ Device

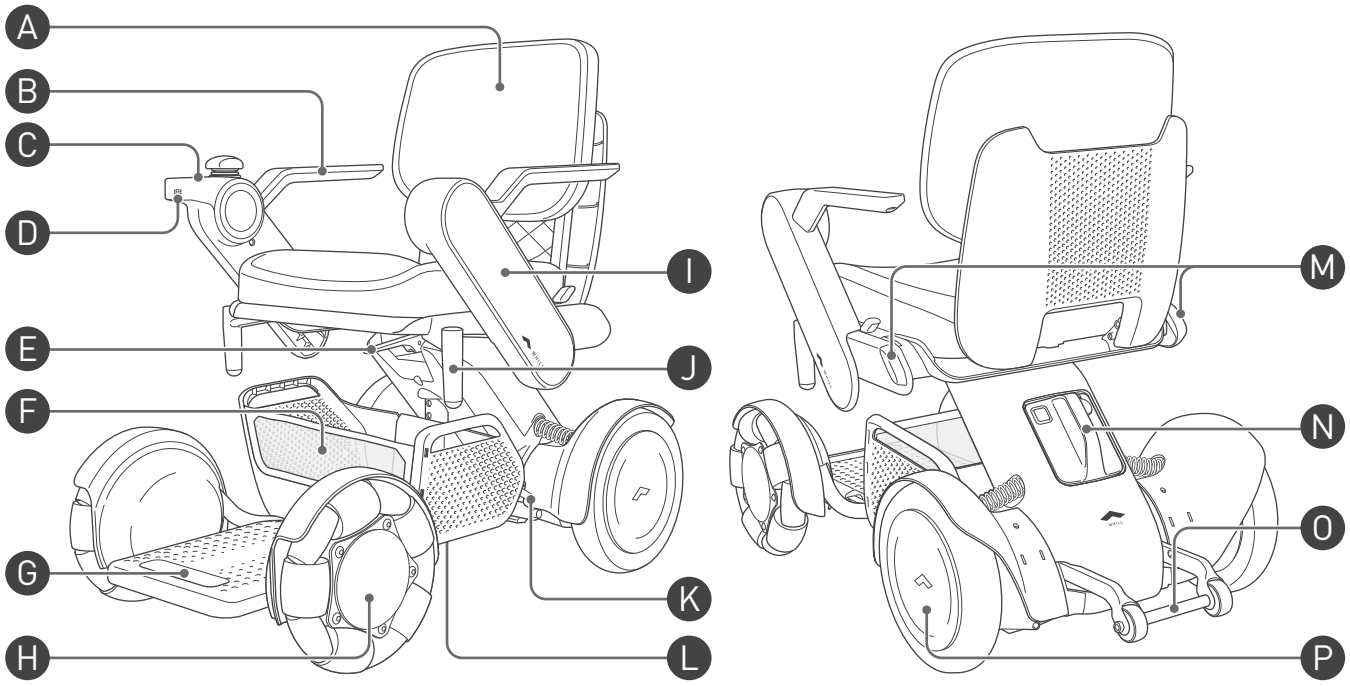

* The illustration is of a model with the control pad on the right side.

A Back support

B Arm rest

C Control pad

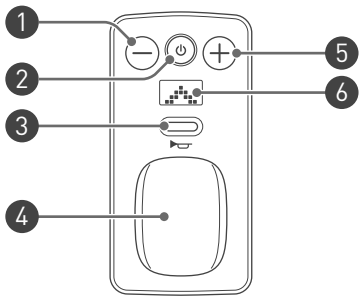

1. Speed select button "–"
   Decreases the maximum speed.
2. Power button
   Turns on/off the device.
3. Sound button
   Sounds the alarm.
4. Joystick
   Controls the forward, backward, left, and right movements. The degree of joystick inclination can also control acceleration and deceleration.
5. Speed select button "+"
   Increases the maximum speed.
6. Display

D Speaker

E Seat release lever

Used to separate the seat assembly from the rear drive base.

F Storage basket (Sold separately. Equipped with standard items depending on the area/countries.)

Used to carry storage items.
It is installed onto the front drive base.

G Foot rest

Supports the user's feet when the user is seated in the device.

H Front wheel (Omni-wheel)

I Arm

The diagonal part located on the left and right sides of the device.
The control pad can be installed on the end of the left or right arm.

J Accessory bar

Use to attach accessories.

K Brake release lever

Used to lock/unlock the brakes for the rear wheels.
This lever is located under the seat assembly.
There are two levers in total.

L Base release handle

This is the connection part of the rear drive base and the front drive base.

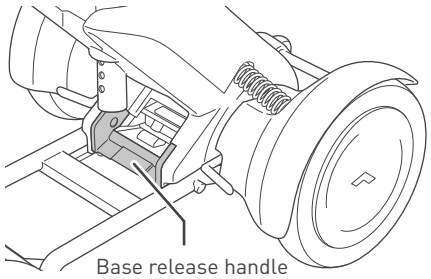
Base release handle

M Tail light (Sold separately. Equipped with standard items depending on the area/countries.)

The red LED light located on the rear sides of the arms.

N Battery

For details, refer to "3.1. Battery and charger components" on page 24.

O Anti-tip bar

Prevents the device from tipping over backwards.

P Rear wheel

■ Charger

Used to charge the battery.
For details, refer to "3.1. Battery and charger components" on page 24.

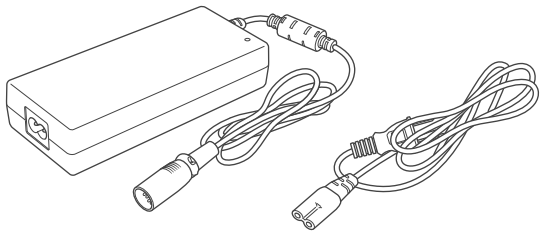

■ Smart key

For details, refer to "4.8. Using the smart key*" on page 54.



■ Information labels

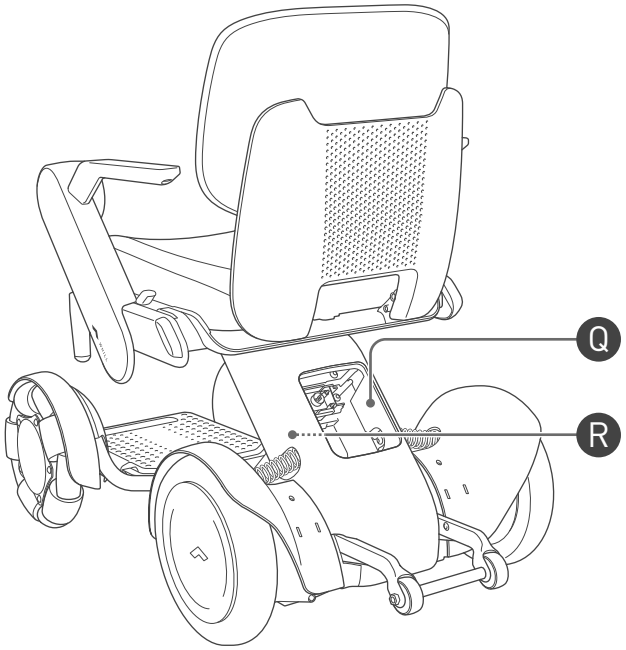

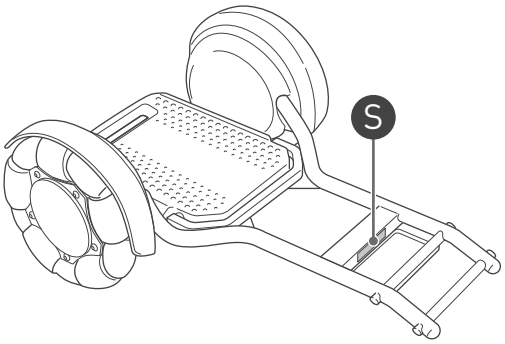

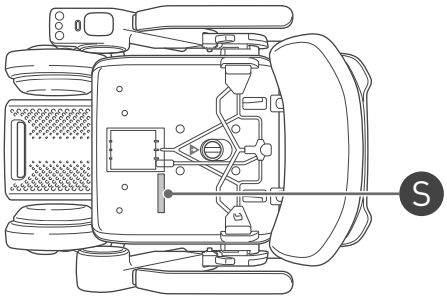

Q Manufacturer information label



Indicates the manufacturer and manufacturer's address.

R Primary identification label

Indicates the serial number and UDI (Unique Device Identifier).

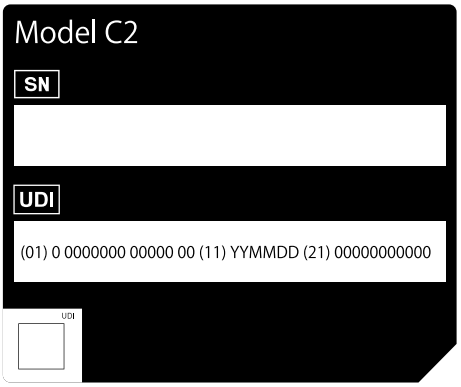

S Serial number label

Shows a serial number identical to the one in Q on the disassembled parts. When contacting the distributor or customer support, check the serial number by referring to any of the labels.

2.3. Accessories

Be sure to use only authentic accessories.

For the accessories that can be installed onto this device, contact your distributor or customer support, or visit the WHILL Website (https: //whill.inc).

3. Charging the battery

Charge the battery before using for the first time. Ensure the battery is charged before use if the device has not been used for a long period of time.

The maximum driving range of this device (20 km (12.4 miles)) was measured under ideal conditions; however, the actual range may vary depending on the driving conditions such as hills, curves, steps, terrain, driving habits, load, and temperature. If the device is going to be driven for an extended period of time or a longer distance, we recommend the following suggestions:

- Fully charge the battery before use.
- Keep weight of storage items to a minimum.
- Plan your route to avoid hills and obstacles.
- Maintain consistent speed and avoid sudden and frequent stops.

⚠ WARNING

- **Carefully read the explanations in this manual regarding the battery and charger, and follow the instructions.**
  There is a risk of fire or battery explosion when disassembling the battery or charger. Do not allow flames near the battery or charger, avoid getting the battery and charger wet or subjecting them to impact (dropping, penetration with nails, or standing on them), etc.
- **Device battery should be charged in a well-ventilated space that is free of flammable gases and that is at least twice the size of the device.**
  There is a risk of explosion or other accidents if the space is filled with flammable gas or if ventilation is insufficient.
- **If the battery has external damage or you notice an abnormality in its functioning, immediately discontinue use or charging, and contact your dealer.**
  There is a risk of electric shock, short circuit, and fire.

- **Never attempt to disassemble the battery or charger.**
  There is a risk of explosion.
- **Never touch the device connectors.**
  There is a risk of serious injury or electric shock. Doing so will also void the device warranty.

⚠ CAUTION

- **If the device is not used for a long period, ensure the battery is fully charged before storing. Charge the battery at least once a month.**
  There is a risk that the battery may get excessively depleted and cannot be charged.
- **Be sure to install the cap when the battery charging port is not in use.**
  There is a risk of a short circuit caused by foreign objects.
- **Unplug the DC connector of the charger from the battery after charging.**
  There is a risk of battery deterioration if the DC connector of the charger is left plugged in the battery for a long time.

- **The battery and charger are for the WHILL Model C2 only. Do not charge the battery by using a charger other than the charger provided with the device or charge other batteries with the charger provided with the device.**
  There is a risk of malfunctions.

- Install a charged battery and turn on the power after 5 seconds. If the unit does not start up properly, remove the battery and reinsert it after at least 10 seconds.
- The charger is for indoor use only. Do not charge the battery outdoors.
- This product will decelerate if the battery temperature drops significantly in a low temperature (below 0°C) environment. In that case, the driving speed on level ground will be limited to 3km/h at most. Although the temperature of the battery is not the same as the air temperature or the ambient environment, do not leave the battery in an environment below 0°C for a long time before driving.
- If you try to go up a steep slope when the battery temperature is low, the vehicle may stop.
- If you drive downhill with the battery near full charge, the car will decelerate. The lower the temperature of the battery, the greater the deceleration.
- We recommend charging the battery regularly, each time you finish using it for example, so that the device has a fully charged battery when it needs to be used. Although the device can be used without the battery charged fully, in an emergency, the device may get stuck while driving if the battery charge level is low.
- If you have any questions about the battery, please contact your distributor or customer support.

3.1. Battery and charger components

■ Battery

This device uses a lithium-ion battery with a voltage rating of 25.3 V.

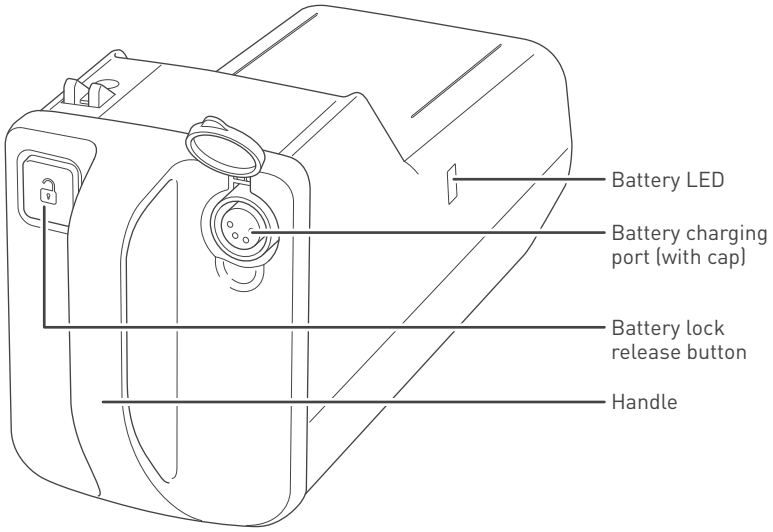

■ Charger

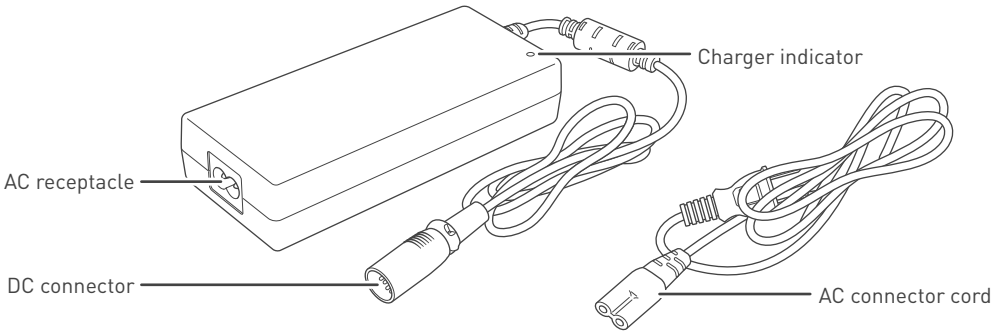

3.2. Charging procedure

Be sure to charge the battery before using the device for the first time or when it has not been used for a long period of time.

There are two ways of charging the battery: charging with the battery installed on the device, or charging with the battery removed from the device.

No maintenance is required for the battery.

⚠ WARNING

- **Charge the device using a household power supply.**
  There is a risk of electric shock, short circuit, and fire. Charge using a 100 - 240 V, 50 - 60 Hz wall-mounted outlet.
- **Persons who have an implanted pacemaker, implanted defibrillator, or other electrical medical devices on their bodies, must leave a minimum of 8 inches (20 cm) between themselves and the magnetic connectors.**



  The magnetic connectors are located at the connection between the seat assembly and rear drive base. The magnetism of the magnetic connectors may have an adverse effect on electrical medical devices.

- **Do not touch the battery and charger while the battery is being charged or after the charge is completed.**
  There is a risk of low temperature burns.
- **Do not touch the connectors directly, allow them to become wet, or bring any metal or other foreign objects close to them.**
  There is a risk of injury and of damage to the device or its parts.
- **Do not use an extension cord with the charger.**
  There is a risk of electric shock, short circuit, and fire.
- **Do not pull with excessive force on the AC connector cord.**
  There is a risk of electric shock, short circuit, and/or fire.
- **Do not charge with wet hands.**
  There is a risk of electric shock.

⚠ CAUTION

- **Charge at an ambient temperature between 0 and 40 °C (32 and 104 °F).**
  The battery may not charge if charged at a temperature outside this range. This may cause battery deterioration or battery damage.
- **If the device is not used for a long period, ensure the battery is fully charged before storing. Charge the battery at least once a month.**
  There is a risk that the battery may get excessively depleted and cannot be charged.

- **Do not charge the battery while the brakes are released.**
  There is a risk that the device may move, causing an accident.
- **Do not use the charger and AC connector cord other than those provided with the device.**
  Using a charger or AC connector cord other than the one supplied may result in electric shock, or in burns caused by charger overheating. In addition, do not use the charger and AC connector cord included with the device in any other device.

- The device cannot be used while the battery is being charged.
- The approximate charging time is 5 hours.
- The charger is designed to prevent overcharging. Even if the charger is left plugged in for more than 5 hours, there is no risk of the device being damaged. However for safety reasons, avoid leaving the charger plugged into the wall outlet for a long time.
- Immediately disconnect the DC connector from the battery after charging is completed.
- If the usable time after charging has become abnormally short and the battery must be replaced, contact your distributor or customer support.

3.2.1. Charging with the battery installed in the device

For safety reasons, it is not possible to turn on the device power while the battery is being charged.

1. **Move the device close to the outlet.**

2. **Turn off the device power.**

3. **Connect the charger and AC connector cord.**

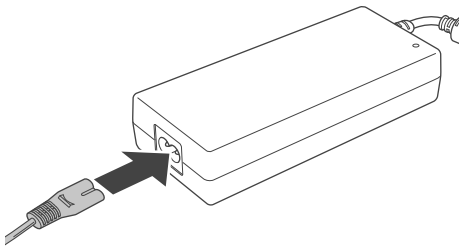

4. **Plug the charger into the wall outlet.**
   The charger indicator illuminates yellow.

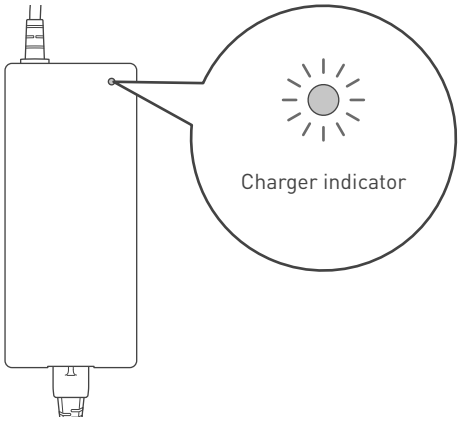

> When the charger indicator is yellow, it means that the charger is connected to the wall outlet and not connected to the battery.

5. **Remove the battery charging port cap and connect the DC connector to the battery charging port.**
   Check the orientation of the DC connector and then connect it. The charger indicator begins flashing green, and charging starts.

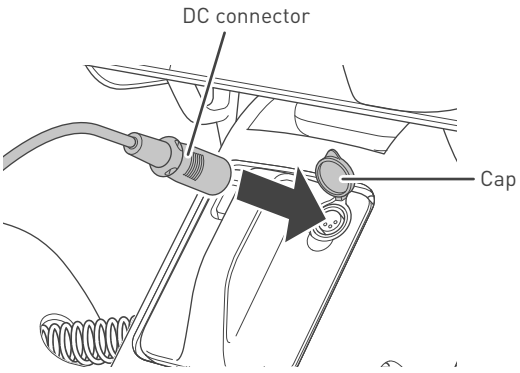

> - If the charger indicator flashes yellow, the charger is not properly connected. In this case, disconnect the charger from the battery and reconnect.
> - If the charger indicator flashes in yellow even though you attempt to establish a connection several times, a battery or charger malfunction may have occurred.
> - If the charger indicator turns green right away even though the battery is not charged fully, a battery other than the battery provided with the device may have been used. Be sure that the charger indicator flashes green.

6. Charging is completed when the charger indicator turns green.

7. Disconnect the DC connector from the battery, then disconnect the plug from the wall outlet.

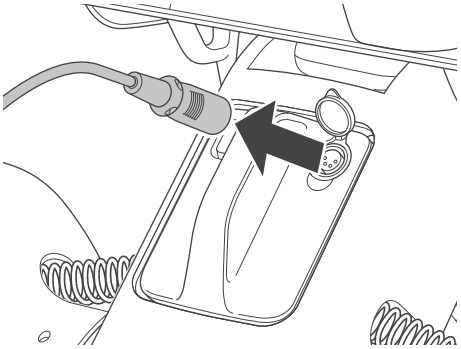

8. Close the cap of the battery charging port.

3.2.2. Charging with the battery removed

1. Check that the device power is off.

2. Press the battery lock release button.

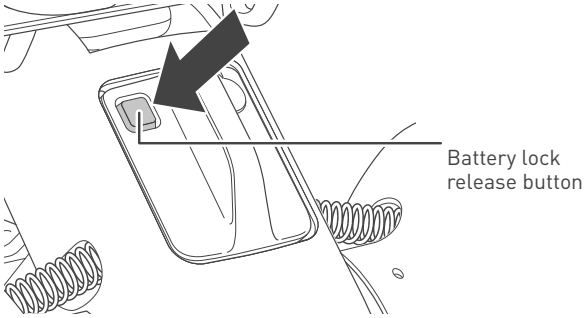

3. Grasp the handle and pull it towards you to remove the battery.

> The battery weighs 6.0 lbs (2.7 kg). Handle the battery with care – dropping it will increase a risk of injury and damage to the battery.

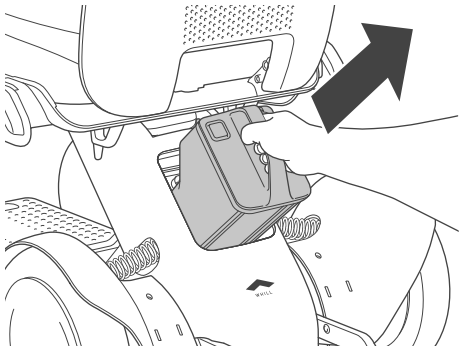

4. Connect the charger and AC connector cord.

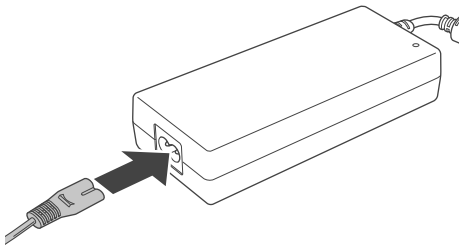

5. **Plug the charger into the wall outlet.**
The charger indicator illuminates yellow.

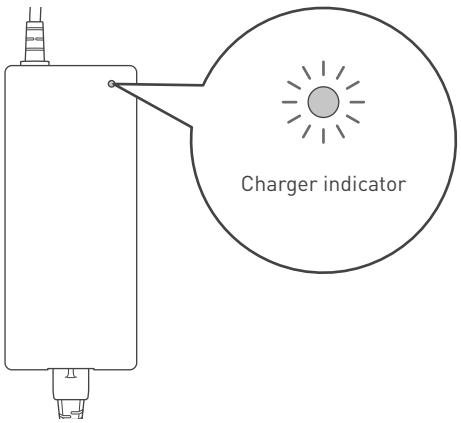

> When the charger indicator is yellow, it means that the charger is connected to the wall outlet and not connected to the battery.

6. **Remove the cap of the battery charging port and connect the DC connector to the battery charging port.**
Check the orientation of the DC connector and then connect it. The charger indicator begins flashing green, and charging starts.

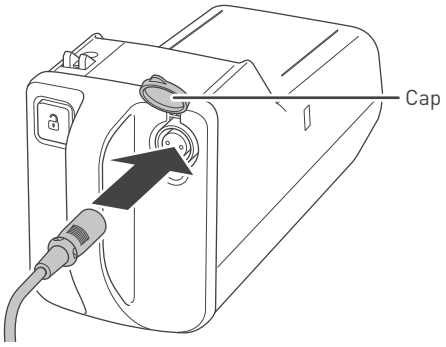

You can check the charge level of the battery on the battery LED.
- Full charge: green
- Approx. between 30% to full charge: orange
- Approx. less than 30%: red
- No charge: purple

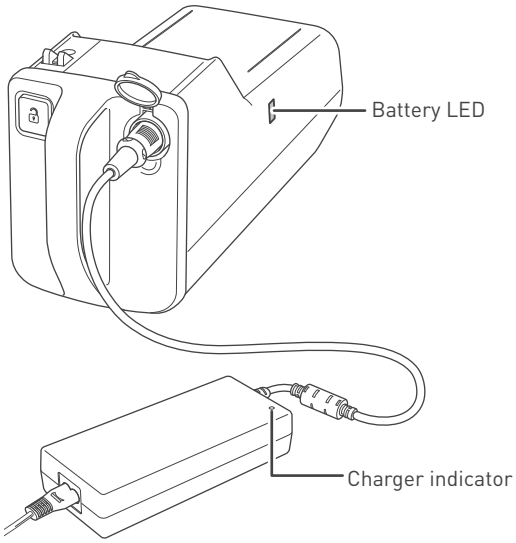

> - If the charger indicator flashes yellow, the charger is not properly connected. In this case, disconnect the charger from the battery and reconnect.
> - If the charger indicator flashes in yellow even though you attempt to establish a connection several times, a battery or charger malfunction may have occurred.
> - If the charger indicator turns green right away even though the battery is not charged fully, a battery other than the battery provided with the device may have been used.

7. **Charging is completed when the charger indicator and battery LED turn green.**

8. **Disconnect the DC connector from the battery, then disconnect the plug from the wall outlet.**

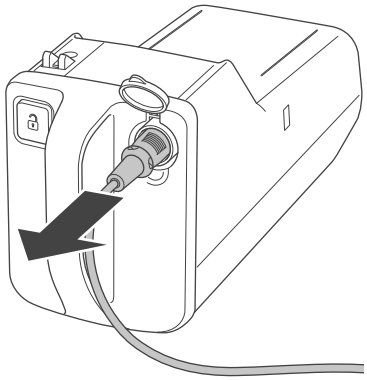

> The battery LED turns off a while after charging completes.

9. **Close the cap of the battery charging port.**

10. **Install the battery onto the device.**
Be sure that the battery lock release button is not pressed.

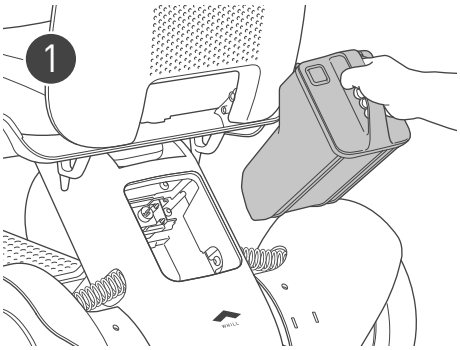

❶ **Grasp the battery handle and insert the battery into the battery compartment.**

> The battery weighs 6.0 lbs (2.7 kg). Handle the battery with care – dropping it will increase a risk of injury and damage to the battery.

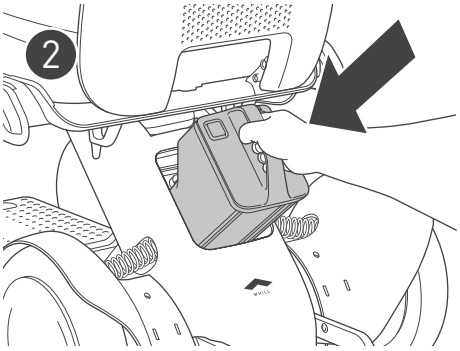

❷ **Insert the battery straight and press it until it clicks. When it is difficult to insert the battery, push it from the front with force.**

If the battery does not easily set in place, there may be a foreign object inside the compartment. Shine a light inside the compartment and check. If there is a foreign object, ensure you remove it with a small brush, etc. before trying again.

3.2.3. Charger indicator displays

The charger indicator illuminates or flashes according to the battery states as shown below.

- Flashing green: charging
- Solid green: charging completed
- Solid yellow: standby
- Flashing yellow: charging error*

  * Charging is not possible when the charger indicator is flashing yellow.

    When the charger indicator flashes yellow, disconnect the charger from the battery and reconnect it securely. If the issue continues after reconnecting, try using a different power outlet. Ensure connecting the plug after confirming the charger indicator turns off. If the problem persists, discontinue use and contact your dealer/ distributor or WHILL Customer Support for further assistance.

4. Operating procedures

This section explains the procedures for getting in and operating the device.

⚠ WARNING

- **Do not sit on the control pad, place the removed seat assembly upside down, or apply an excessive load to the control pad. Do not press the control pad or switches with excessive force or operate them with a sharp object.**
  There is a risk that the control pad may be damaged, rendering the device inoperable.

⚠ CAUTION

- **If the device is not used for a long period, ensure the battery is fully charged before storing. Charge the battery at least once a month.**
  There is a risk that the battery may get excessively depleted and cannot be charged.

- This product is an electrical product. The waterproof performance is "IPX4", so please avoid using the product in the rain as much as possible to prevent malfunction.
- When using the device for the first time, it is recommended that you use it in an environment with someone around you.

4.1. Inspection before getting in the device

Inspect the following before getting in the device.

■ Inspection items

1. Inspection with the power off

Assembly

- Check that all parts are correctly assembled and that there are no missing, broken, damaged, or loose parts.
- Check that the seat release lever and base release handle are locked.

Function

- Check that the joystick moves smoothly.
- Check that the brakes can be released and the device can be pushed manually. Also, check that when the brakes are locked, the device does not move when pushed.

Wheels

- Check that there is no visible deformation or cracking of the front omni-wheels or rear wheels.
- Check the treads of both rear wheels and ensure they are not worn down by more than 1/64 inches (0.5 mm).
- Check that the front omni-wheels are not worn down by more than 1/64 inches (0.5 mm) or that the metal of the core part is not exposed.

2. Inspection with the power on

- Check the battery charge level on the display and the charge level is sufficient.
- Check that the switches on the control pad are functional.
- Check that the entire display is functional.
- Check that the sound button is functional.
- Check that the wheels are not making unusual noises when they spin.

- If you encounter any of the problems as listed above, which you are unable to resolve, contact your distributor or customer support.
- White stains may be observed on the rollers of the product's front wheel (omni-wheel). They are the wax component of the anti-degradation material contained in the rubber rising to the surface and poses no quality problems.

⚠ WARNING

- **Before use, check for any improperly assembled, missing or broken components, and check that the brakes are locked.**
  There is a risk of injury or accident. If components need to be replaced or repaired, stop using the device immediately and contact your distributor.

⚠ CAUTION

- **Do not ride on the anti-tip bar.**
  The device may lose its anti-tipping functionality if the anti-tip bar is deformed. Contact your distributor for replacement if it is deformed.

4.2. Getting in the device

Read this manual to understand the contents before using the device.

Pay attention to the following when getting in.

⚠ WARNING

- **Turn off the device power when getting in and out of the device.**
  There is a risk of unexpected movement of the device caused by accidental contact with the control pad.
- **Ensure that the brakes are locked before getting in the device. Do not leave the device while the brakes are released.**
  If the brakes are released, there is a risk that the device may start moving and tip over
- **If your body is not stable in the seat of the device, ensure you use the lap belt (if equipped).**
  There is a risk of falling out of the device. If the device you are using does not have a lap belt, contact your distributor.
- **The maximum load weight for this device is 300 lb (approx. 136 kg). It includes both the occupant and any luggage. Use the device without subjecting it to a load higher than this limit.**
  There is a risk of damaging the device.
- **When using your own cushion, for safety, be sure to use one that has sufficient flame-retardancy.**

- **Do not apply your weight to the control pad or accessory bar.**
  There is a risk that these components may become disconnected, rendering the device inoperable.
- **Do not jump onto the foot rest, stand on the foot rest while carrying a heavy object, or place an excessive load on the foot rest.**
  There is a risk of the device lifting up and tipping.

⚠ CAUTION

- **Be careful not to catch your finger or hand in the rotating parts of the arm when operating the arm.**
  There is a risk of injury.
- **Ensure the device is functional in a safe space each time after setting and adjusting the speed.**
  There is a risk of unintended movement of the device.
- **The back support is not fixed. Be careful when transferring.**
  There is a risk of injury.
- **If the device is equipped with a lap belt, fasten it during use.**
  There is a risk of injury.
- **Consult a seating technician before changing the seat cushions on the device.**
  There is a risk of injury due to improper positioning.

- **Do not apply force to the device from the sides.**
  There is a risk that the device may tip over. Do not forcefully push or pull the device from the side.

The maximum driving range or driving speed of this device may vary depending on the driving conditions such as hills, curves, steps, terrain, load, and temperature. The device may stop suddenly depending on the condition. For the errors that occurs during use, check “9. Troubleshooting” on page 104.

4.2.1. Accessing the seat from the front

1. Ensure that the power is turned off.

2. Raise the foot rest with the handle held in hand.

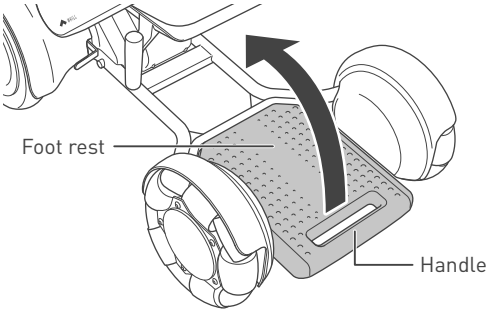

3. Sit in the seat.

- Do not let your hands touch the control pad.
- As the back support can be folded forward, do not pull it toward you or apply force to it in the forward direction.
  There is a risk that the back support may tilt forward, causing an accident.

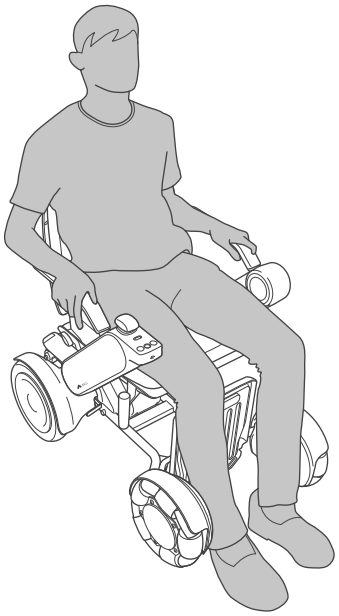

4. Lower the foot rest.

WARNING



Inserting a finger or other body part into the connecting components and moving parts of this device may result in an injury.
When assembling, adjusting, disassembling, and transporting this device, do not touch any component other than those indicated in the manual.

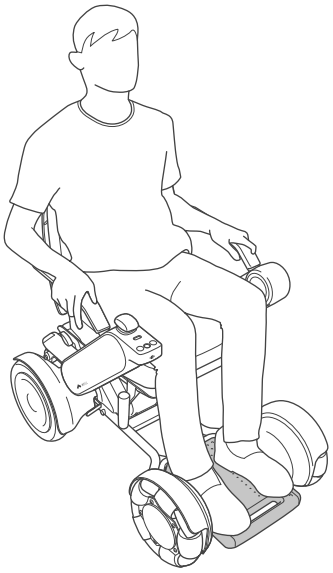

4.2.2. Accessing the seat from the side

When getting in the device from your chair, we recommend doing so as shown below.

1. **Ensure that the power is turned off.**

2. Raise the arm.

   ❶ **Pull the arm release lever forward.**
   The arm is unlocked.

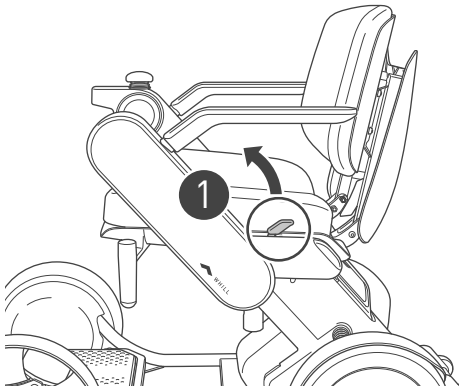

   ❷ **Rotate the arm back.**

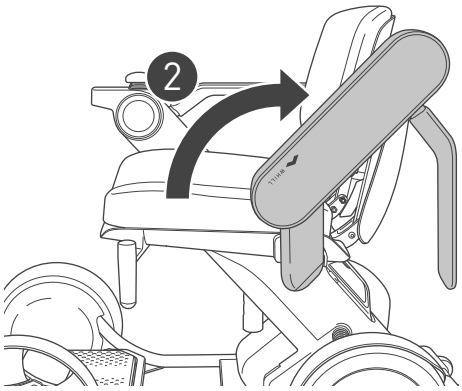

3. **Sit in the seat.**

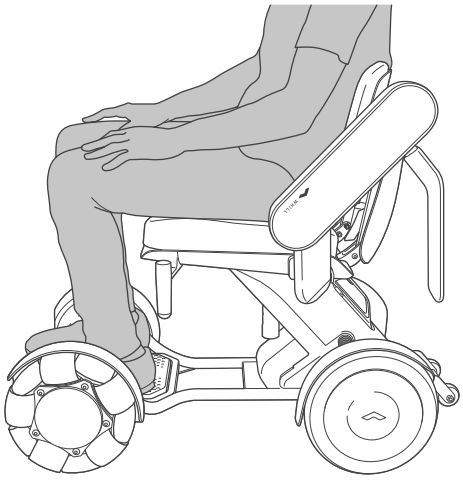

> - Do not let your hands touch the control pad.
> - As the back support can be folded forward, do not pull it toward you or apply force to it in the forward direction.
>
>   There is a risk that the back support may tilt forward, causing an accident.

4. Rotate the arm forward.

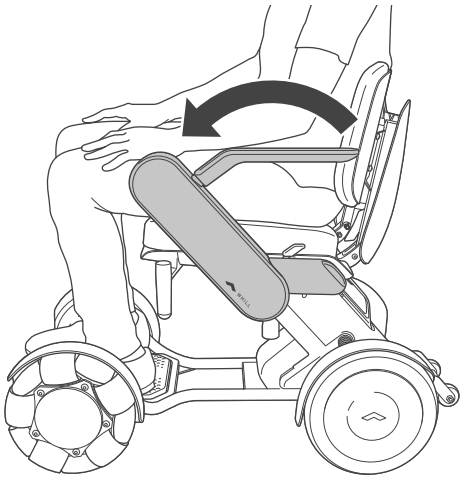

Check that the arm is locked.

4.3. Fastening the lap belt*

If the device you are using is equipped with a lap belt, fasten it during use.

* Sold separately. Equipped with standard items depending on the area/countries.

1. **Fasten the lap belt.**
   Insert the tongue into the buckle until a click sound is heard.

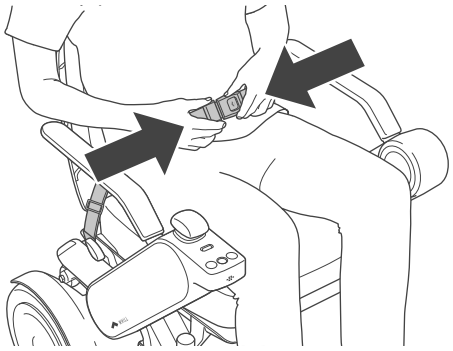

After fastening the belt, adjust its length so that your body is held securely in place.

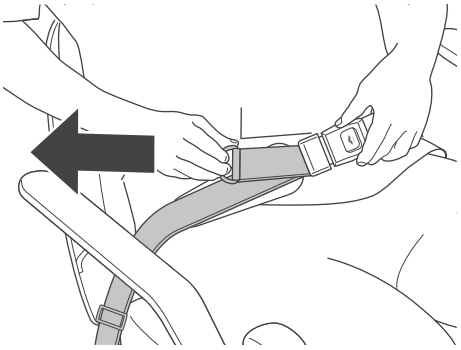

4.3.1. Removing the lap belt

1. **❶ Press the button on the buckle, ❷ Remove the lap belt.**

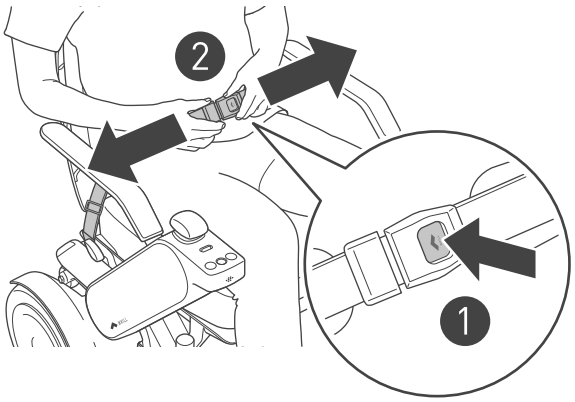

4.4. Turning on the power

⚠ WARNING

- **Lock the brakes before turning on the power.**
  If the brakes are released, there is a risk that the device may start moving and tip over.

- **Do not press the switches on the control pad with excessive force or operate them with a sharp object.**
  There is a risk that the control pad may be damaged, rendering the device inoperable.

⚠ CAUTION

- **Ensure the device is functional in a safe space each time after setting and adjusting the speed.**
  There is a risk of unintended movement of the device.

4

1. **Press the power button.**
   The device turns on and the tail lights (if equipped) turn on.

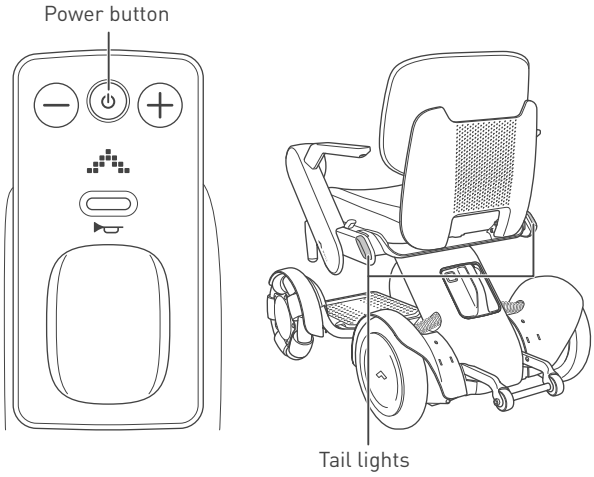

> Install a charged battery and turn on the power after 5 seconds. If the unit does not start up properly, remove the battery and reinsert it after at least 10 seconds.

When the device turns on, first the WHILL logo appears on the display, and next the current speed setting is displayed. The display will then show the battery charge level indicator.
To check the speed setting again, either turn the power off and back on, or else press the speed select buttons and adjust the speed.

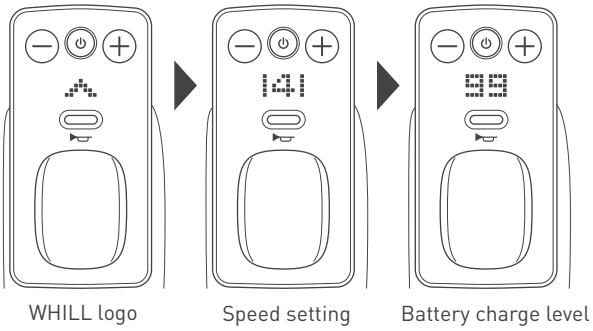

4.4.1. Checking the battery charge level

1. **The battery charge level is shown on the display as a number from 0 to 100, changing in increments of 1.**
   When fully charged, the charge level is shown as “100”.

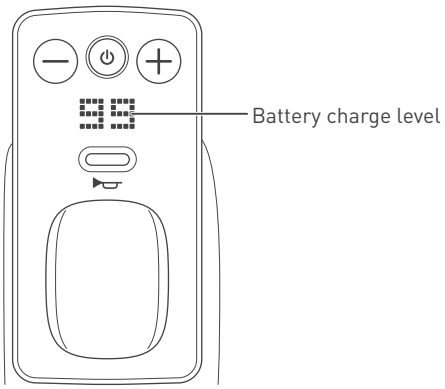

> The battery charge level may decrease rapidly or unexpectedly for various reasons such as the environment or battery conditions due to the characteristics of the lithium ion battery. Be sure to fully charge the battery before using it regardless of the distance you plan to travel.

4.4.2. Adjusting the speed

1. **The maximum speed (when the joystick is tilted all the way) can be adjusted in 4 stages from 1 (slow) to 4 (fast) by operating the speed select buttons.**
   + button: increasing the speed.
   - button: decreasing the speed.
   The device speed can be adjusted according to degree of movement of the joystick.

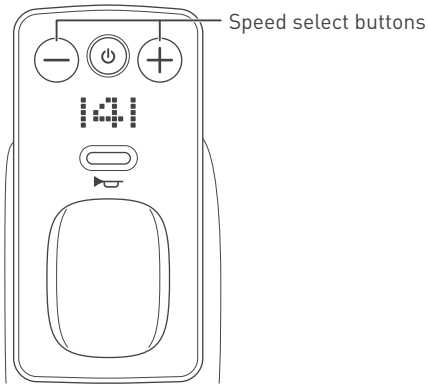

4.4.3. Using the sound button

1. **To alert individuals near your device, press the sound button.**

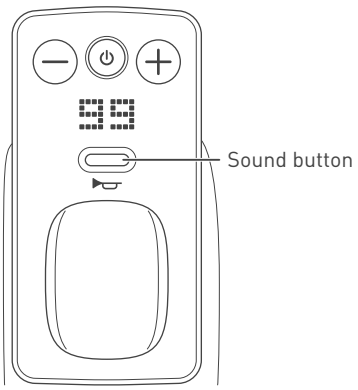

4.5. Driving

Move the joystick forward, backward, left, or right to move the device in the desired direction. The speed can be adjusted by the degree of joystick movement.

Releasing the joystick automatically applies the brakes and stops the device.

When driving outdoors, always observe all traffic laws.

If you want to practice driving, do so in an open space with good visibility.

⚠ WARNING

- **Ensure the battery is locked before driving.**
  The device may stop while driving due to problems between the connection of the device and battery.
- **When operating the device while wearing gloves, be careful to avoid the gloves getting caught in the device.**
  There is a risk that the gloves may become caught in control components, resulting in unintended movement of the device.
- **When driving, fully check the surroundings and road conditions. Drive carefully at low speed particularly when driving in locations crowded with people, close to walls or other locations where there are obstacles nearby, and in narrow places or on uneven surfaces or slopes.**
  There is a risk accidents may occur. When driving on wet inclines, there is a risk that the device may lose stability. Pay close attention when driving.
- **When driving at night or in places with poor visibility, check that the tail light is visible to other people before using the device.**
  There is a risk of accident.
- **When approaching curbs, steps, slopes, and similar obstacles, approach at a 90° angle and drive over them carefully at low speed.**
  There is a risk of tipping over or deforming the drive base.
- **Be careful that people or objects around you do not touch the control pad.**
  There is a risk of collision and tipping over.
- **Avoid letting your body touch the wheels. Do not let others around you touch the wheels.**
  There is a risk of injury.
- **When stopping on a downhill slope, release the control pad early, and make sure that the device stops with an ample amount of extra space around it.**
  The stopping distance is longer when on a downhill slope. There is a risk that you may be unable to stop in the intended position, causing an accident.
- **When driving near a platform or gutter, maintain a safety margin from the edge.**
  There is a risk of falling.

⚠ WARNING

- **Release the brakes only when on a flat surface and in emergencies after turning off the power. After moving the device manually with the brakes released, raise the brake release levers and lock the brakes.**
  There is a risk accidents may occur because the device will move freely when the brakes are released.

- **Do not press the switches on the control pad with excessive force or operate them with a sharp object.**
  There is a risk that the control pad or switches may be damaged, rendering the device inoperable.

- **While riding the device, do not crouch down, lean out of the device, or exercise. Pay attention to the center of mass while driving.**
  There is a risk the device stability and balance will be affected. Request help from those around the device before reaching for inaccessible objects.

- **Avoid operating the device when wearing clothing or other items that can easily be caught in the rotating parts of the arm, wheels, or other moving parts. Also avoid driving on cables or strings.**
  There is a risk that clothing, cable, or strings may be caught in these parts, preventing you from controlling the device.

- **Lower the foot rest and keep your feet on the foot rest while driving.**
  There is a risk that your feet may become caught in moving components.

- **Do not drive while holding something in your hand or with something placed on your lap.**
  There is a risk of unintended movement of the device.

- **Do not drive the device in the following areas.**
  The device may tip over and there is a risk of accidents may occur.
  - Escalators or stairs
  - Steps that are more than 2 inches (50 mm) high
  - Slopes with a gradient of 10° or more
  - Soft surfaces such as sand or mud
  - Snowy or frozen paths

- **Do not drive through puddles.**
  There is a risk of corrosion and short circuit.

- **Do not extend arms, legs, or baggage outside of the device.**
  There is a risk of injury caused by collision while driving.

- **Do not tow using the device.**
  There is a risk of tipping over.

- **Do not attempt to maneuver the device onto an incline if the anti-tip bar touches the ground on the incline. When the anti-tip bar touches the ground it means that the incline is too steep for the device.**
  Maneuvering the device when the anti-tip bar is in contact with the ground or the incline is extremely dangerous will cause the device to lose control.

⚠ CAUTION

- **Check that the arms are locked before beginning operation.**
  There is a risk of accident by moving the arms while driving.

- **The device may slow down or suddenly stop in the following cases.**
  - The remaining capacity of the battery becomes low.
  - The battery temperature drops significantly during use.
  - Driving downhill at a high speed in low temperature.
  - Driving on a steep slope with the battery charged fully.
  - Driving on bumps or upward slopes.

- **When outdoors, drive on the paved sidewalk.**
  This device is not designed for use on roads for automobile. When crossing roads, check that the drivers can see you and exercise sufficient caution.

- **Do not twist the joystick assembly except when replacing it.**
  There is a risk that the joystick may be loosened or damaged, rendering the device inoperable.

- **Do not operate the brake release levers with your feet.**
  The brake release levers may become deformed, broken, and unusable.

- When driving on steep inclines, the deceleration rate of the device may automatically change.
- When driving downhill with a low battery temperature and a near full charge, there is a greater chance of slowing down.
- If you use the device indoors, flooring may be damaged or become dirty.

4.5.1. Moving forward and backward

Move the joystick forward to move the device forward, and backward to move the device backward.

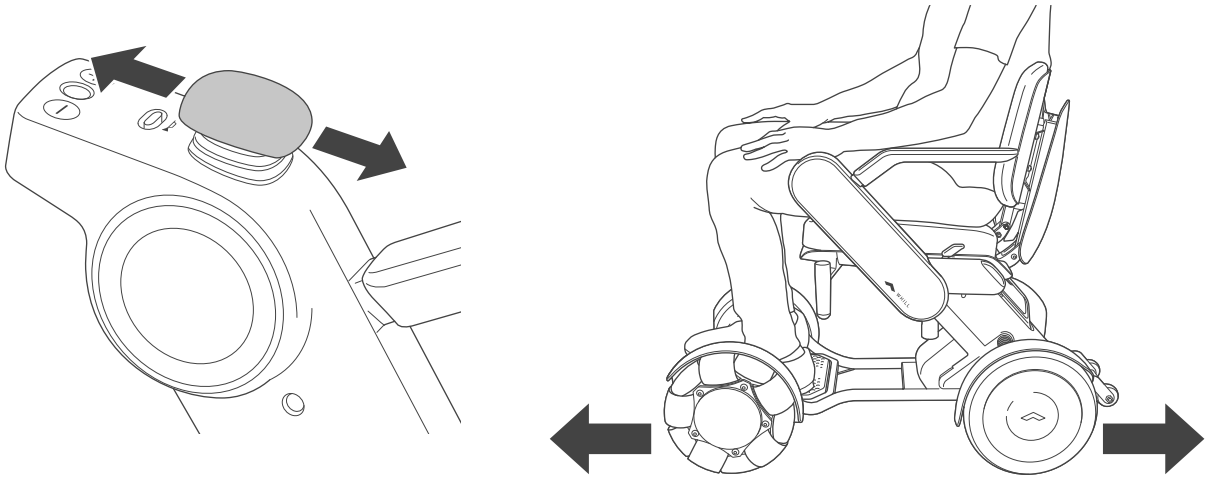

4.5.2. Moving in a diagonal direction

To move in a diagonal direction, first turn the device so that it faces the direction you want to go. Then move the joystick straight forward or backward to move forward or backward in the diagonal direction.

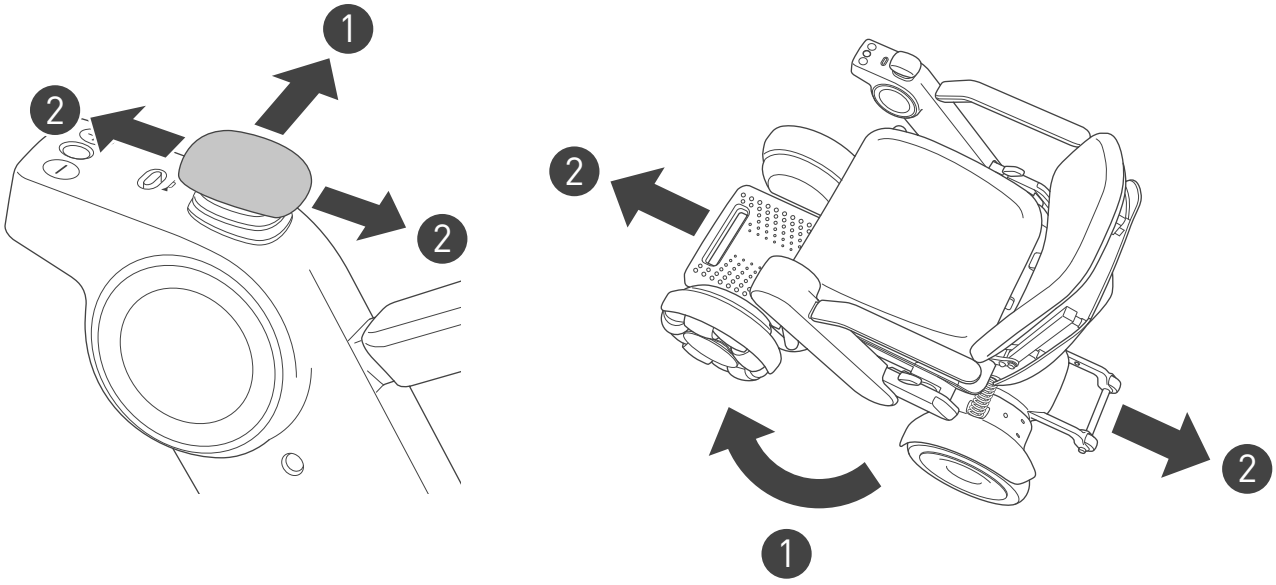

4.5.3. Turning

To turn in place, move and hold the joystick to the left or right.

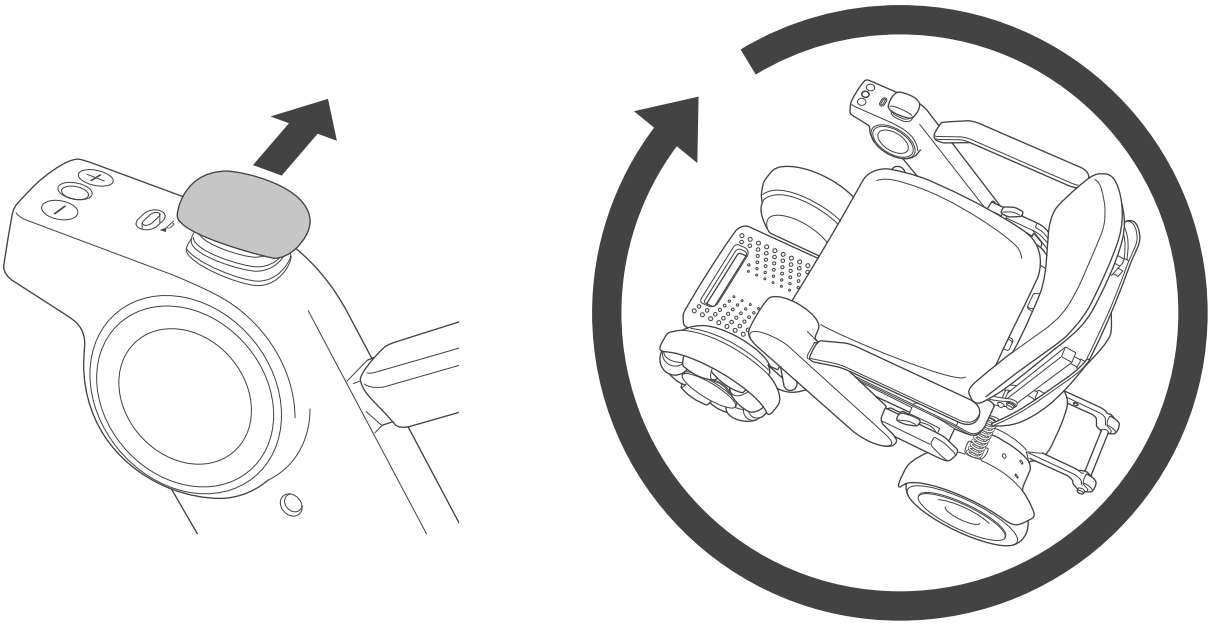

4.5.4. Stopping

Releasing the joystick automatically applies the brakes and stops the device.

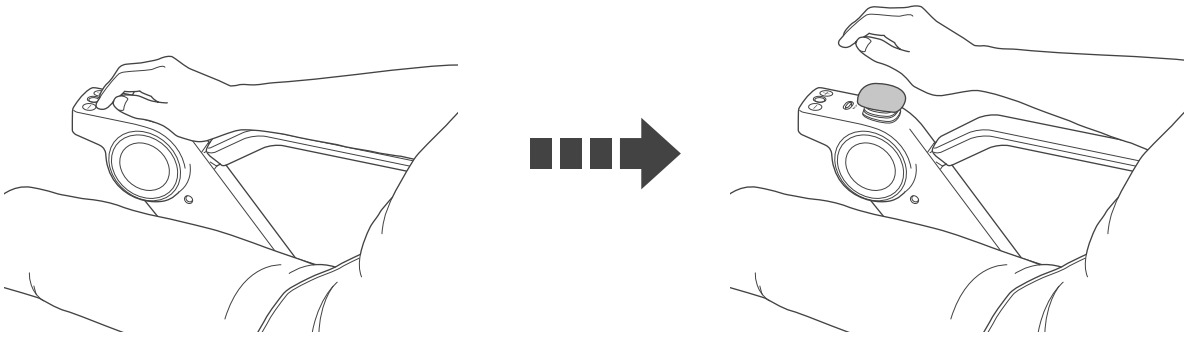

4.5.5. Controlling the speed

The device speed can be controlled by the degree of movement of the joystick.

Increasing the tilt angle of the joystick increases the device speed while reducing the tilt angle decreases the speed.

The speed can be controlled in a continuous scale.

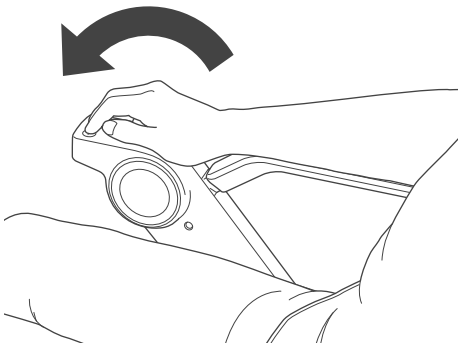

High speed (large tilt angle)

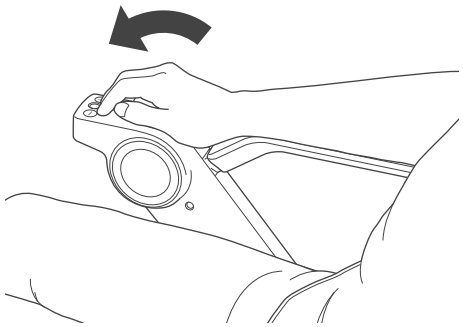

Low speed (small tilt angle)

- When beginning to drive, move the joystick only the amount needed to start moving slowly.
- The maximum speed when the joystick is moved all the way varies depending on the speed that was set with the speed select buttons. For the procedure used to set the maximum speed, refer to "4.4.2. Adjusting the speed" on page 43.

4.5.6. Driving under different road conditions

The device can maintain stability under a wide range of conditions.

However, it cannot be driven under the following conditions.

- Steps higher than 2 inches (50 mm)

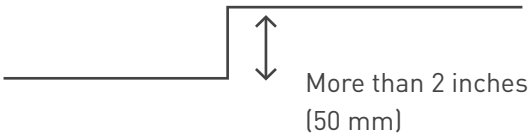

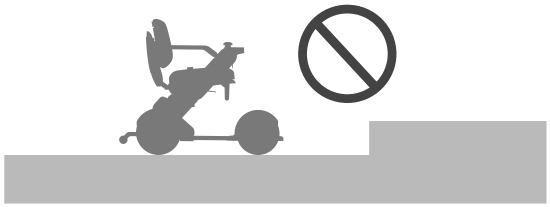

- Slopes with a gradient of 10° or more

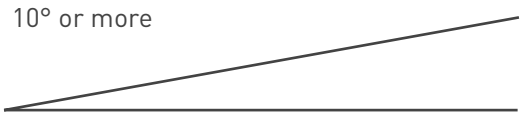

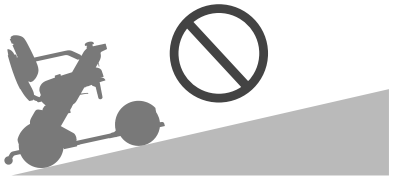

- Soft surfaces such as sand, mud, snowy or frozen paths.
  * Driving on gravel, light snow, and grass is possible.



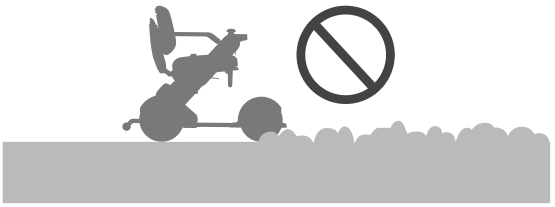

If there is a possibility that the device is on a very steep climb, an error code will appear on the display, and a warning sound will be played. For more detailed information about warnings, please refer to “9. Troubleshooting” on page 104.

Depending on your region and/or country, notification sound services may not be offered.

4.6. Releasing the brakes

To move the device manually, push down the brake release levers located below the seat assembly.

⚠ WARNING

- **Release the brakes only when on a flat surface and in emergencies after turning off the power. After moving the device manually with the brakes released, raise the brake release levers and lock the brakes.**
  There is a risk accidents may occur because the device will move freely when the brakes are released.

⚠ CAUTION

- **When moving the device after releasing the brakes, push it slowly by hand.**
  When the brakes are released, the device will move freely. Pushing it forcefully may cause it to move in an unexpected direction. If the device is pushed at speeds of 3.7 mph (6 km/h) or higher, there is a risk of battery malfunction because a load is applied to the battery.

- **Do not operate the brake release levers with your feet.**
  The brake release levers may become deformed, broken, and unusable.

4.6.1. Release procedure

1. **Turn off the device power.**

2. **Push down both brake release levers below the seat assembly (two on the right and left side).**
   The brakes are released. To re-engage the brakes, raise both brake release levers.

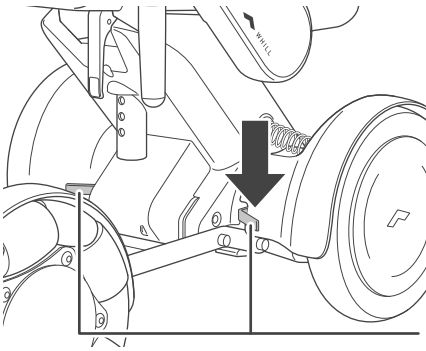

4.7. Carrying items

Use the storage basket when carrying any items. Do not place any items on the arm or arm rest because doing so could damage and/or deform the arm or arm rest.

■ Storage basket*

Place any storage items in the storage basket that is located under the seat assembly.

* Sold separately. Equipped with standard items depending on the area/countries.

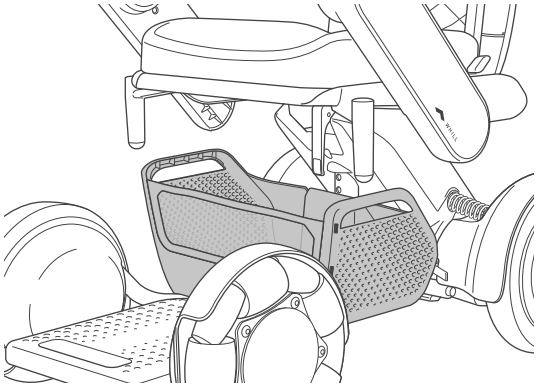

4

⚠ CAUTION

● Pay attention to the following when using the storage basket.

There is a risk of accident.

- Stored items do not protrude from the sides of the storage basket.
- Turn off the device and verify the safety of your surroundings before placing or removing any objects.
- When loading an object, be careful not to hit the battery.

The maximum storage basket load is 13.2 lbs (6 kg). If a heavier load is placed in it, the storage basket may be damaged.

■ Back support

When hanging a backpack on the back support, hang the shoulder straps onto the hooks on the back support.

- The maximum load of the back support is 11 lbs (5 kg).
- Hang the backpack by its shoulder straps and tighten them. Be careful not to let the backpack touch the battery, and make sure that the shoulder straps are not dragging on the ground.
- When driving at night, attach the backpack so that the tail lights (if equipped) are visible.

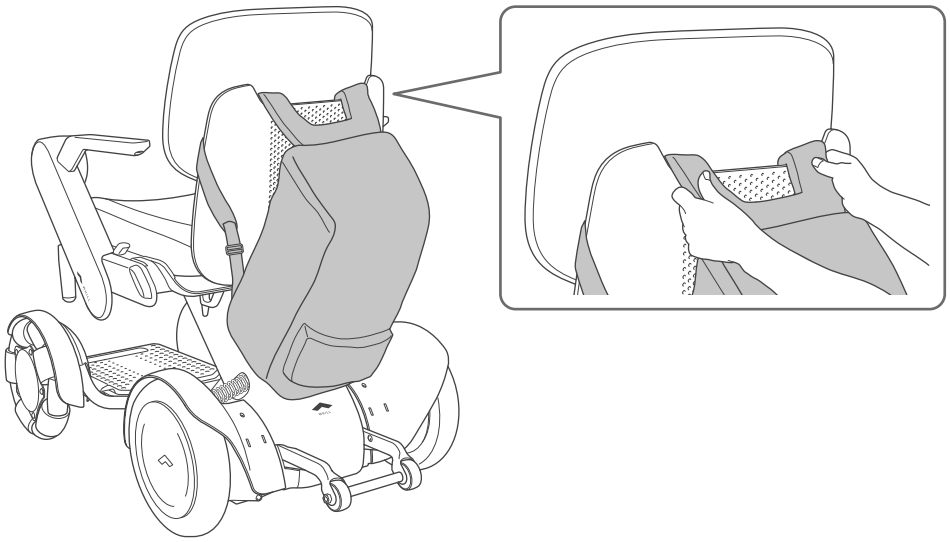

4.8. Using the smart key*

The smart key can be used to lock and unlock the device.

* Sold separately. Equipped with standard items depending on the area/countries.

- For the instructions to change the smart key battery, refer to “8.2. Replacing the smart key battery” on page 97.

4.8.1. Locking

1. **Press the smart key lock button.**
   The smart key LED illuminates, and the icon indicating the locked status appears on the display, while making the lock sound. The device is now locked.

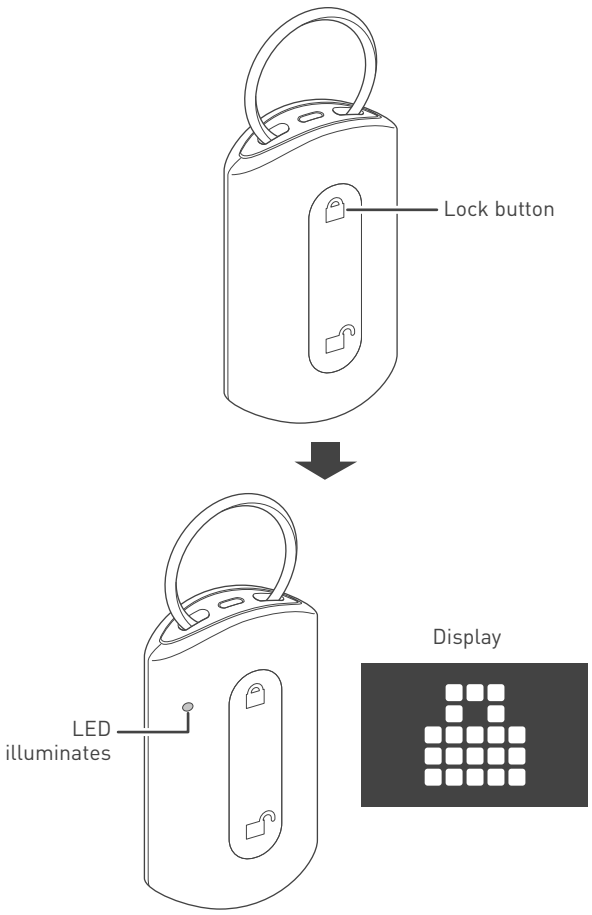

- If you attempt to turn the device on when the device is locked, the icon indicating the locked status appears on the display, and then the power turns off. The device cannot be started.
- Always carry the smart key with you. Although it is possible to lock or unlock the device through a smartphone app, it will not be possible to lock or unlock the device if the smartphone battery runs out.

4.8.2. Unlocking

1. **Press the smart key unlock button.**
   The smart key LED illuminates and the icon indicating unlock appears on the display, while making the unlock sound. And then the device is unlocked.

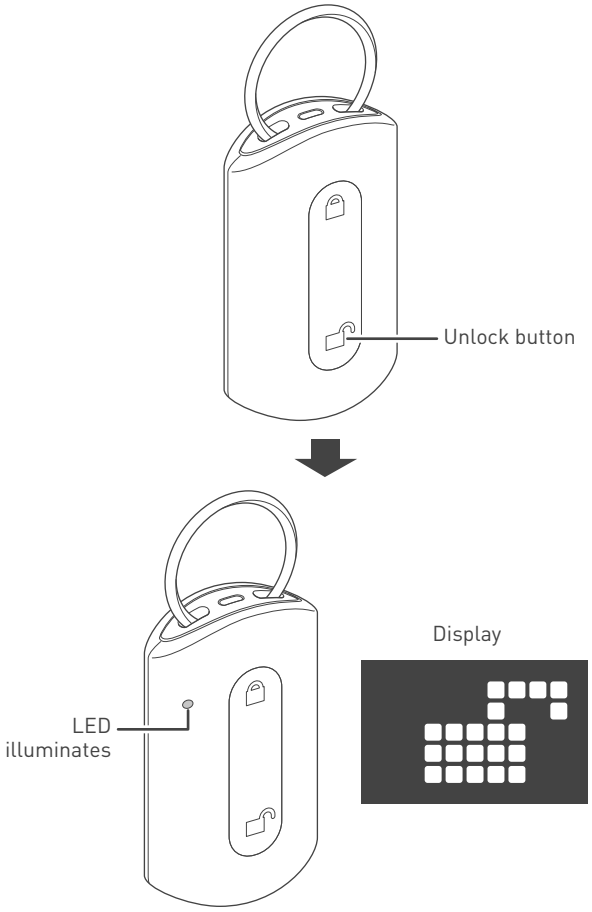

5. Assembly, adjustment, and disassembly

This section explains how to assemble and disassemble the device, and how to adjust each component.

Assemble the device in the order described in this user manual.

⚠ WARNING

- **Do not hoist the device when there is a person on the device. Always disassemble the device before lifting it. Be careful of the weight when lifting each component. Do not lift the component by holding the battery handle while the battery is inserted.**
  There is a risk of injury to the user and damage to the device.
- **Perform assembly, adjustment, and disassembly on a flat and level surface with the battery removed and brakes locked.**
  There is a risk of accident.
- **Always place all parts back on after adjustment or disassembly.**
  There is a risk of damage to the device if there is a missing component.

- **Assemble the device in the order described in this user manual. Do not perform any disassembly, adjustment, repair, or modification that is not listed in this manual.**
  There is a risk of injury and product safety risk due to damage to the device or its parts.
  Performing repair or modification which is not listed in this manual will invalidate the warranty.
- **Do not perform assembly in a wet environment or if the device is wet.**
  There is a risk the device may become damaged and accidents may occur.

Consult with your distributor when adjusting the seat height, back support height/angle, or arm position. Only a trained service technician is permitted to perform maintenance on the device.

5.1. Component list

This device can be disassembled into the following five components.

- Seat assembly

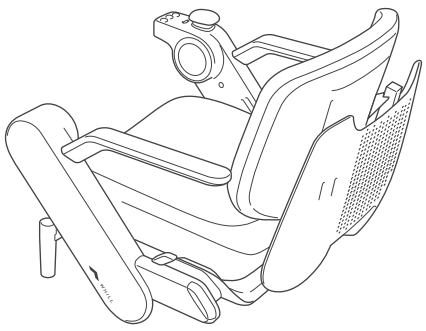

- Front drive base

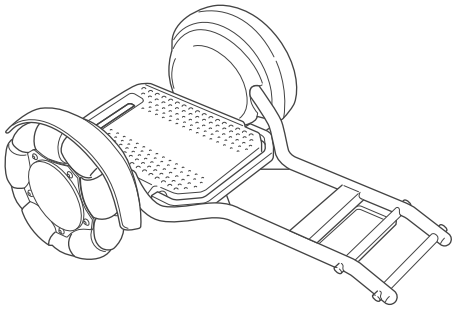

- Rear drive base

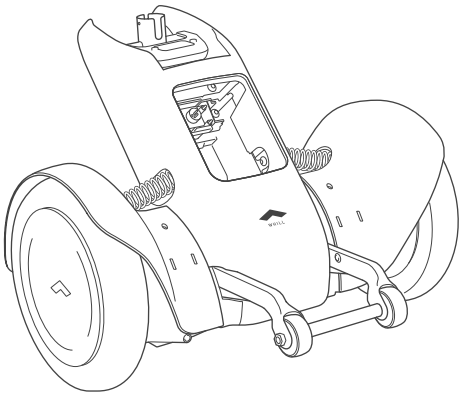

- Battery

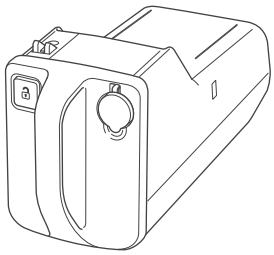

- Storage basket (Sold separately. Equipped with standard items depending on the area/countries.)

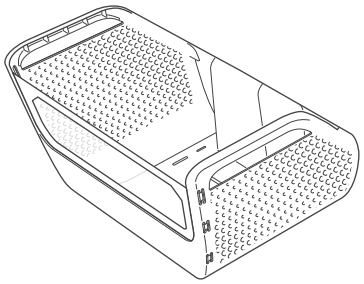

5.2. Assembly procedures

Assembly of the device does not require tools. When assembling the device, pay close attention to the following.

⚠ WARNING

- **Perform assembly on a flat and level surface.**
  There is a risk of accident.

⚠ CAUTION

- **When assembling the device, grab only the handle and part as described in this manual, and do not hold the device by any other areas.**
  There is a risk of hand injury if it gets caught in the device.

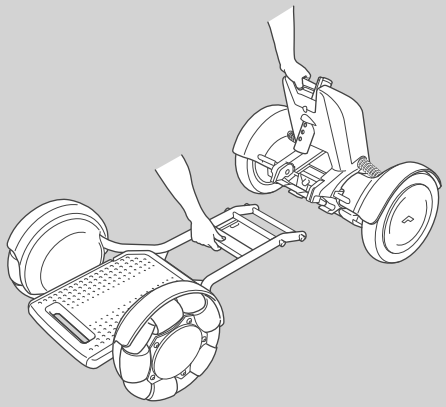

5.2.1. Assembling the front drive base and rear drive base

It is not safe to assemble the product with the battery installed in the main body. Be sure to assemble the unit with the battery removed.

1. **Grab the handle in a central area of the front drive base while tilting up the rear drive base. Then place Bar B on the top of the front drive base on the hook of the rear drive base by aligning them.**

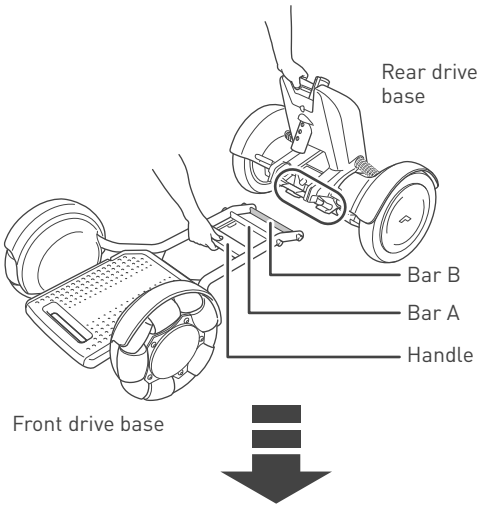

WARNING



Inserting a finger or other body part into the connecting components and moving parts of this device may result in an injury.
When assembling, adjusting, disassembling, and transporting this device, do not touch any component other than those indicated in the manual.

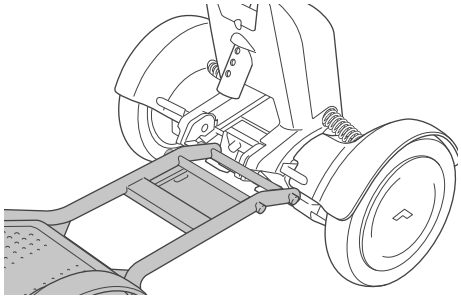

2. **Slowly tilt the rear drive base forward and connect the front drive base and rear drive base.**
   The base release handle of the rear drive base is fitted to Bar A of the front drive base and the two components are locked when they are connected properly.

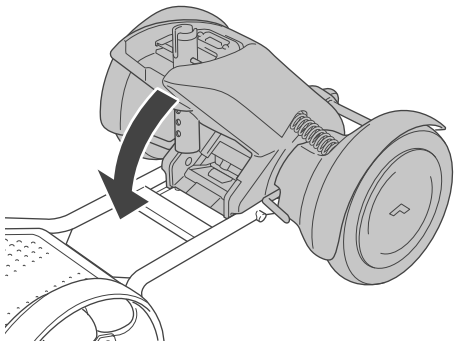

5.2.2. Installing the storage basket*

This section can be ignored when the storage basket is not used.

* Sold separately. Equipped as a standard item depending on the area/country.

1. **Align the hooks on the bottom of the storage basket with the frame of the drive base, then push the storage basket straight down.**

   Push the flat part of the basket bottom until it clicks.

   To fasten the basket to the main body, use the hook and loop tape provided to fix the basket to the frame pipe.

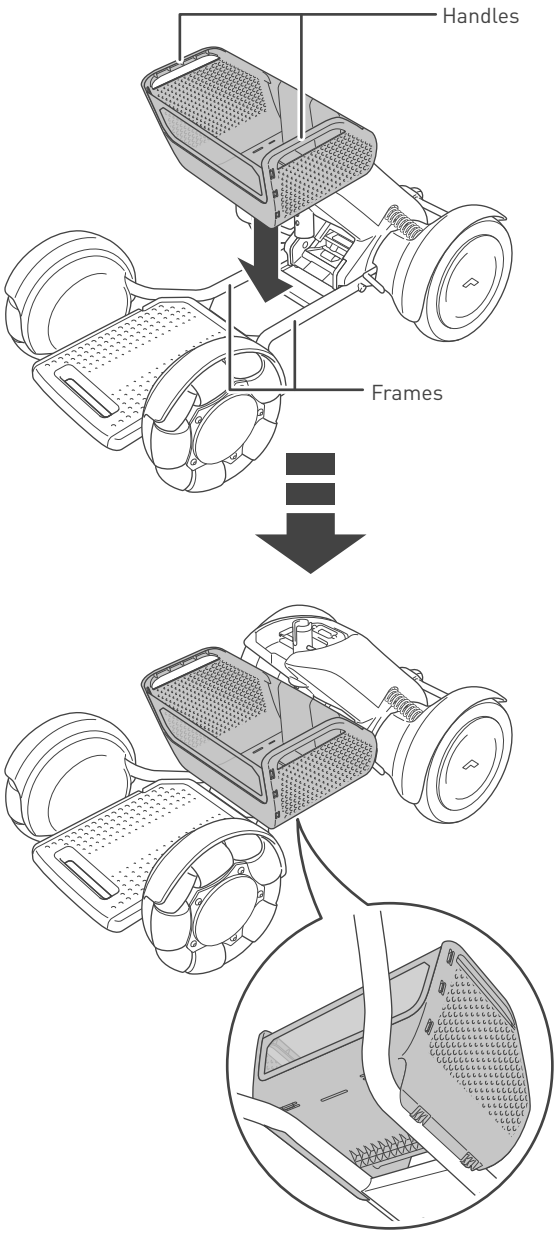

5.2.3. Installing the seat assembly

⚠ WARNING

- **Persons who have an implanted pacemaker, implanted defibrillator, or other electrical medical devices on their bodies, must leave a minimum of 8 inches (20 cm) between themselves and the magnetic connectors.**
  The magnetic connectors are located at the connection between the seat assembly and rear drive base. The magnetism of the magnetic connectors may have an adverse effect on electrical medical devices.

- **Do not touch the connectors directly, allow them to become wet, or bring any metal or other foreign objects close to them. Ensure that there are no foreign objects when assembling.**
  There is a risk of injury or electric shock as well as damage to the device or its components.

⚠ CAUTION

- **Do not press a sharp object against or apply a load to the cables.**
  The damaged cable may cause malfunctions or unexpected device operation.

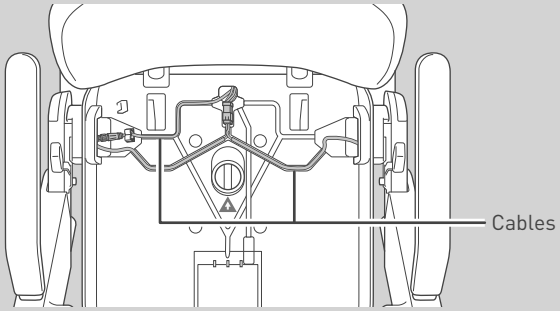

1. Remove the seat cushion from the seat assembly.

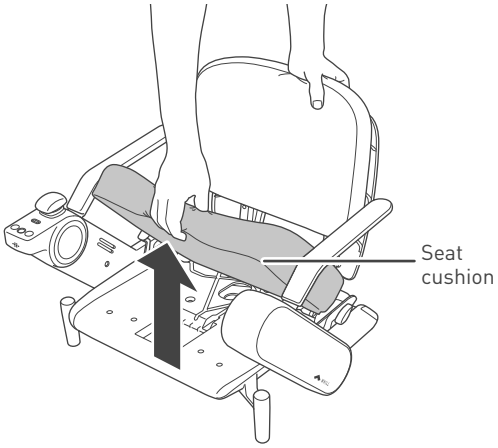

2. Grab the arm rests and lift the seat assembly.

> Confirm both arms are locked before lifting.

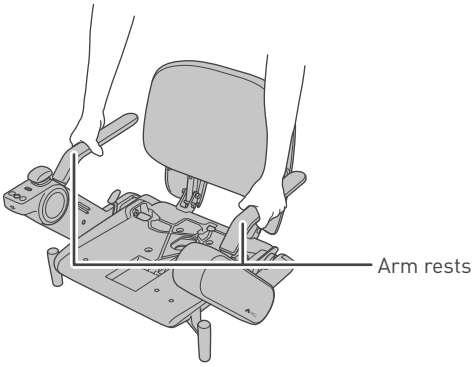

3. Fit the seat assembly straight into position while checking the seat post position from the view hole in the seat assembly.

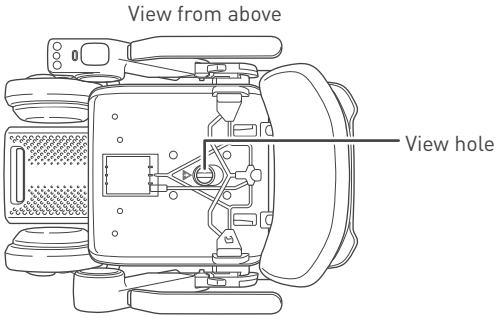

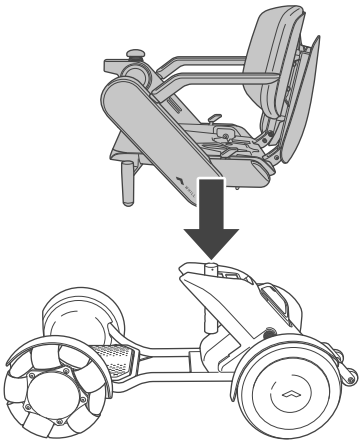

4. **Lower the seat release lever so that it is perpendicular to the seat.**

   The seat is fastened onto the seat post.

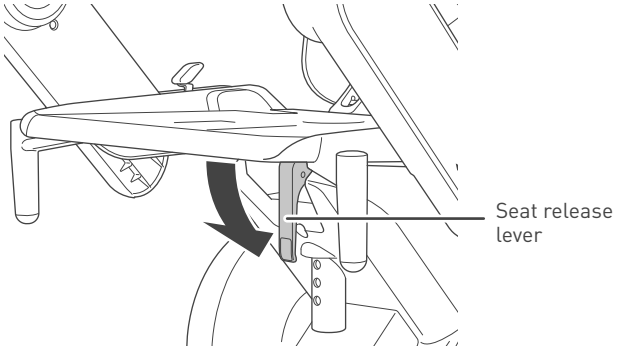

5. **Install the seat cushion onto the seat assembly so that the logo is on the left side.**

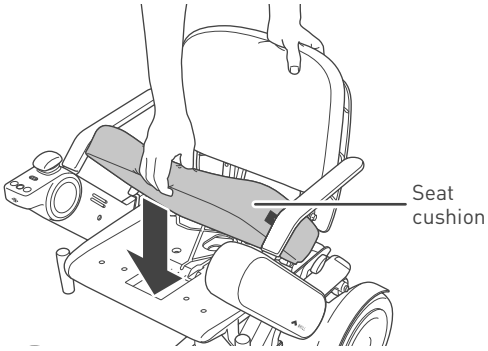

5.2.4. Installing the battery

⚠ WARNING

- **Do not touch the connectors directly, allow them to become wet, or bring any metal or other foreign objects close to them. Ensure that there are no foreign objects when assembling.**
  There is a risk of injury or electric shock as well as damage to the device or its components.

Install a charged battery and turn on the power after 5 seconds. If the unit does not start up properly, remove the battery and reinsert it after at least 10 seconds.
If the device cannot be used even though the battery is inserted/removed several times, a malfunction may have occurred. Please contact your distributor or customer support.

1. **Ensure that the battery lock release button is not pressed.**

2. **Grab the battery handle and insert the battery into the battery compartment.**

   The battery weighs 6.0 lbs (2.7 kg). Handle the battery with care – dropping it will increase a risk of injury and damage to the battery.

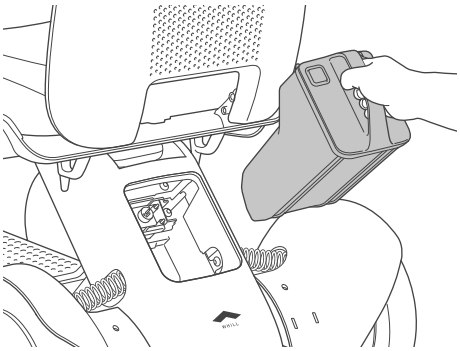

3. **Insert the battery straight and press it until it clicks. When it is difficult to insert the battery, push it from the front with force.**
   If the battery does not easily set in place, the cap may be attached on the battery connector or there may be a foreign object inside the compartment. Shine a light inside the compartment and check. If there is a foreign object, ensure you remove it with a small brush, etc. before trying again.

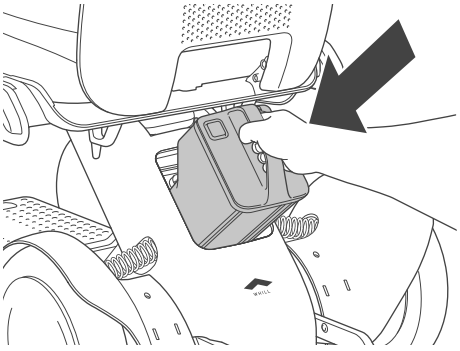

5.3. Adjustment procedures

The following device adjustments can be made to meet the user's seating needs.

- **Arm length:** "5.3.1. Adjusting the arm length" on page 66
- **Switching the left and right sides of the control pad:** "5.3.2. Switching the position of the control pad" on page 68
- **Seat height:** "5.3.3. Adjusting the seat height" on page 75
- **Back support height:** "5.3.4. Adjusting the back support height" on page 78
- **Back support angle:** "5.3.5. Adjusting the back support angle" on page 80

Tools are necessary for adjusting the arm length, seat height, or back support height/angle. Use the specified tools.

⚠ WARNING

- **Perform adjustment on a flat and level surface with the battery removed and brakes locked.**
  There is a risk of accident.

- **Do not touch the connectors directly, allow them to become wet, or bring any metal or other foreign objects close to them. Ensure that there are no foreign objects when assembling.**
  There is a risk of injury or electric shock as well as damage to the device or its components.

⚠ CAUTION

- **When adjusting the device, grab only the handle and part as described in this manual, and do not hold the device by any other areas.**
  There is a risk of hand injury if it gets caught in the device.

- **Pay attention to the following and perform adjustment in order to ensure safe use.**
  There is a risk of accident.
  - Adjust the seating of the device to fit the user's body before use.
  - Make sure to retighten the adjusting bolts.
  - Do not make adjustments while on the device.
  - Before performing adjustment, ensure battery is removed from the device.
  - Do not shake the removed control pad.
  - Do not press forcefully on the components.

5.3.1. Adjusting the arm length

⚠ CAUTION

- **When moving the arm up or down, be careful that your fingers do not become caught.**
  There is a risk of injury.

1. **Remove the battery.**
   For the removal procedure, refer to "5.4.1. Removing the battery" on page 84.

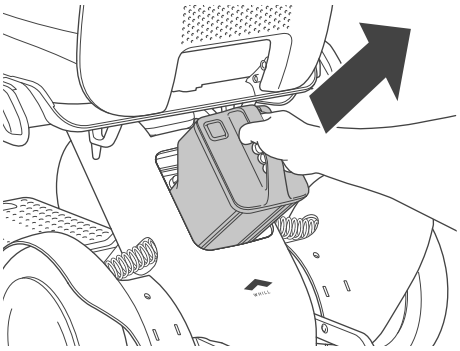

2. **Remove the arm cover.**
   Hold both the front-facing and rear-facing sides of the arm cover and gently bend them outwards then pull the arm cover towards you to remove it.

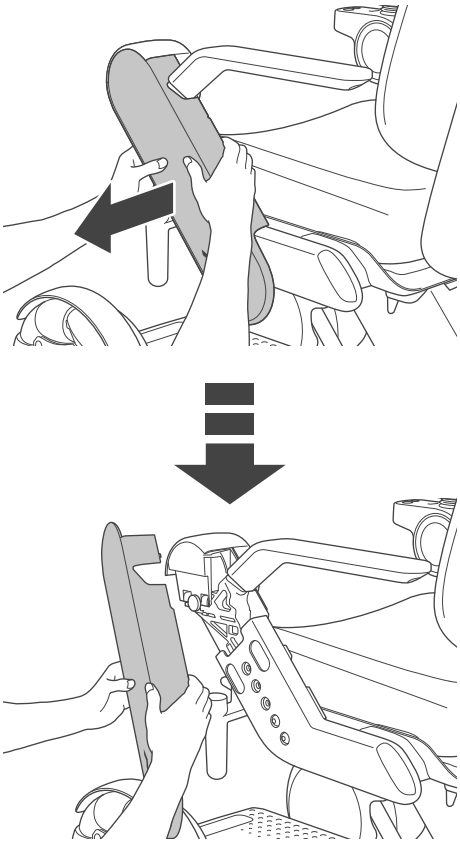

3. **Remove the two arm adjustment bolts with the specified tool.**
   Tool: hex wrench #5

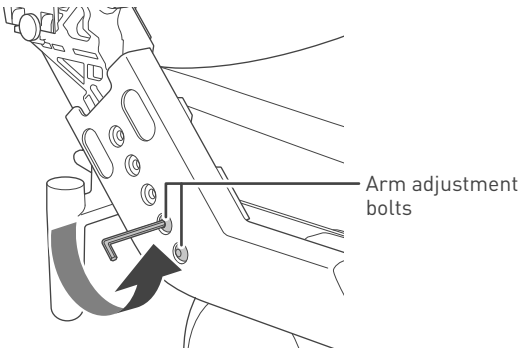

4. **Adjust the arm to the desired length.**

Adjust the arm length so that each of the 2 holes in the arm and device are aligned.
The arm length can be adjusted in 4 stages.

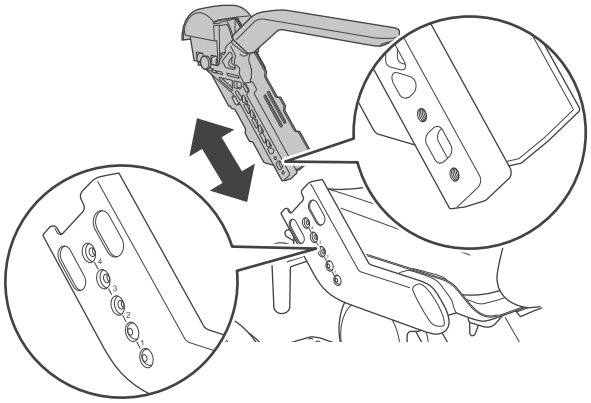

5. **Attach the arm by fastening the two arm adjustment bolts that were removed in Step 3 with the specified tool.**

Set the arm to the appropriate length and tighten the bolts firmly with the specified tool. If a bolt is loose, tighten it.
Tool: hex wrench (or hex torque wrench) #5
Tightening torque: 10 Nm

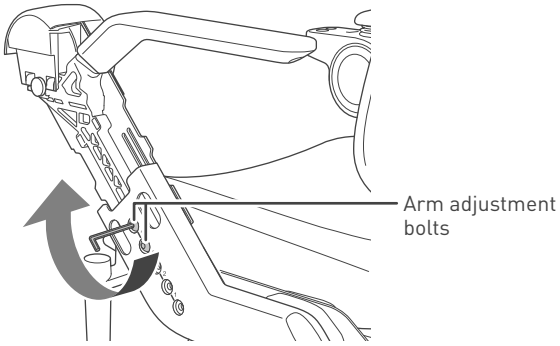

- After adjustment is completed, try to slide the arm up and down to confirm that it is locked in place and does not slide.
- Do not touch the cable.

6. **Install the arm cover.**

Align the tab on the center of the back side of the arm cover so that it fits the arm rest. Gently bend the front-facing and rear-facing sides of the arm cover outwards, then press the arm cover into place with the cut out part aligned.

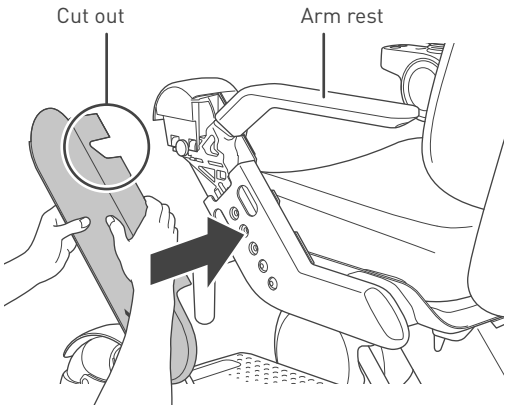

Make certain the cable is not caught in the cover.

7. **Adjust the arm length on the opposite side in the same way.**

8. **Install the battery.**

For the installation procedure, refer to “5.2.4. Installing the battery” on page 64.

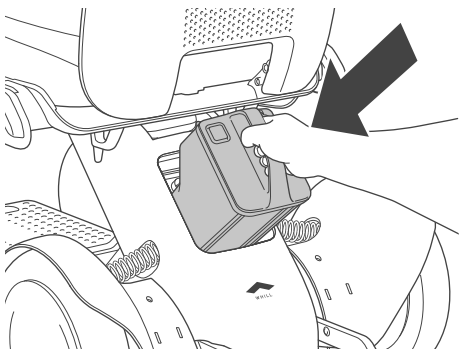

5.3.2. Switching the position of the control pad

The control pad can be installed on the right or left arm.

⚠ CAUTION

- **Do not sit on the control pad, place the removed seat assembly upside down, or apply an excessive load to the control pad. Do not press the control pad or switches with excessive force or operate them with a sharp object.**
  There is a risk that the control pad may be damaged, rendering the device inoperable.
- **Do not throw, step on, drop the control pad, or immerse it in water.**
  There is a risk that the control pad may be damaged from strong impact, rendering the device inoperable.
- **Do not press forcefully, scratch or touch the display with dirty hands.**
  There is a risk that the display may become damaged or illegible.
- **Do not disassemble the control pad.**
  Doing so may cause malfunction of the control pad.

1. **Remove the battery.**
   For the removal procedure, refer to "5.4.1. Removing the battery" on page 84.

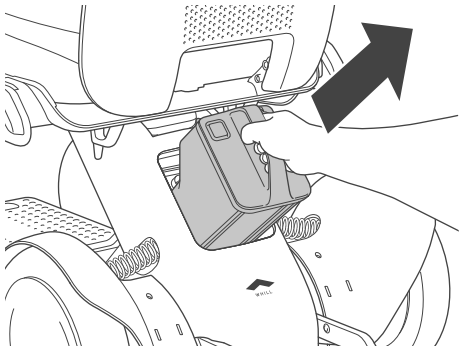

2. **Remove the seat cushion.**

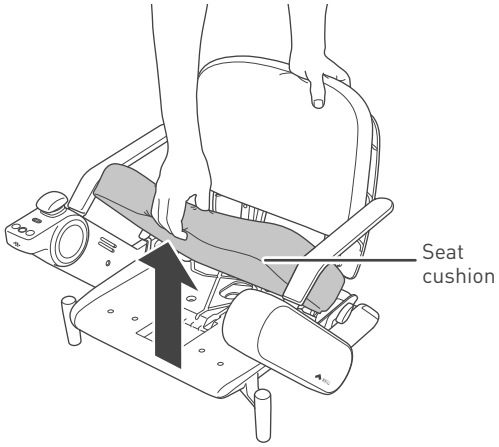

3. **Remove the arm covers on both sides.**
For the removal procedure, refer to Step 2 in "5.3.1. Adjusting the arm length" on page 66.

The explanations in the following steps are the examples for attaching the control pad on the right arm to the left arm.

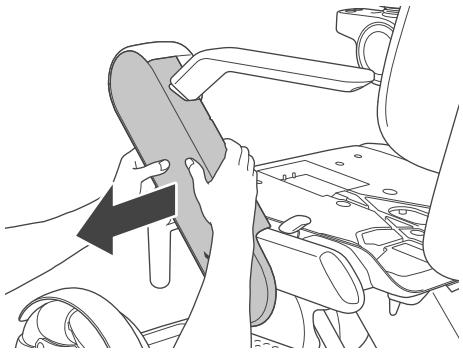

4. **Disconnect the connector of the cable.**
Loosen the base lock of the connector located in the cable-threading hole by rotating it counterclockwise, then disconnect the connector.

- When disconnecting the connector, hold and rotate the base lock of the connector. Do not rotate other parts of the connector.
- When disconnecting the connector, do not pull forcefully. There is a risk of breaking the cables.

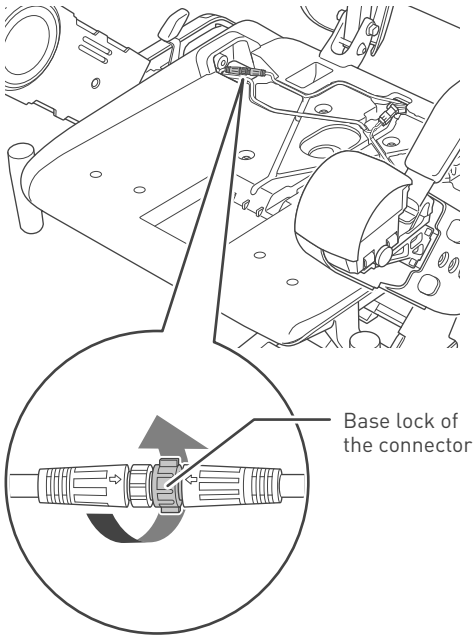

5. **Raise the arm, then remove the cable from the cable clips (four places).**

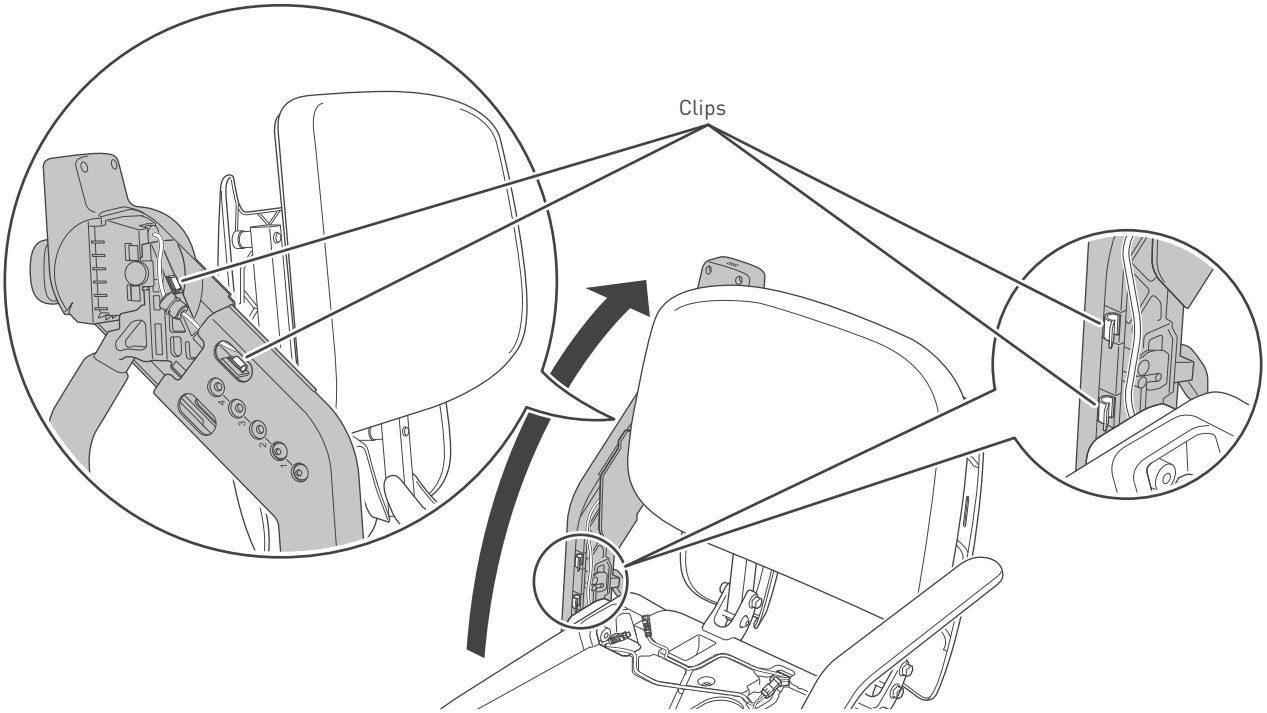

6. Pull out the cable from the cable-threading hole on the seat assembly and arm, then lower the arm.

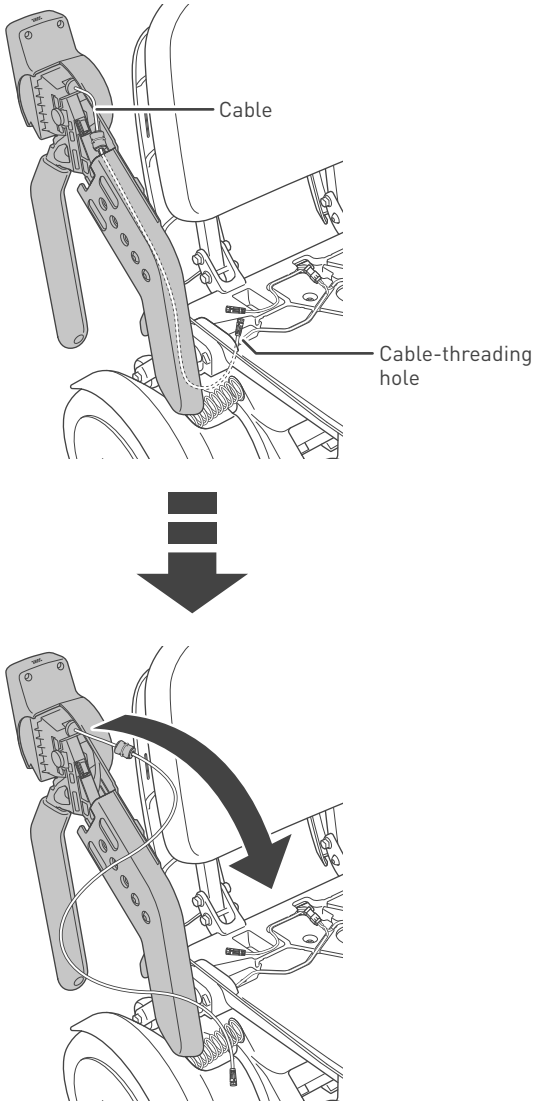

7. Remove the control pad.

   ❶ Remove the screw on the outside of the control pad with your hand.

   ❷ Remove the control pad by sliding it outward.

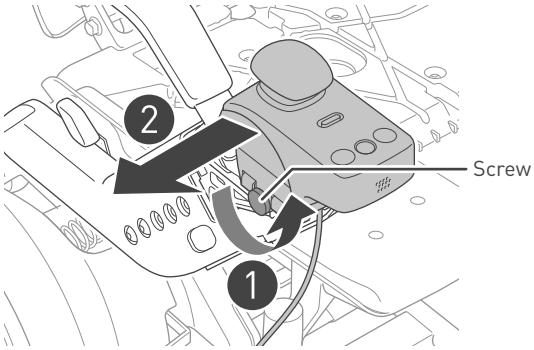

> Before removing the control pad, ensure that the cable is removed from the clips. Do not pull it forcefully. There is a risk of breaking the cable that is connected to it.

8. Remove the round unit at the head of the arm on which the control pad is not attached.

   ❶ Remove the screw on the outside of the round unit at the head of the arm with your hand.

   ❷ Remove the round unit at the head of the arm by sliding it outward.

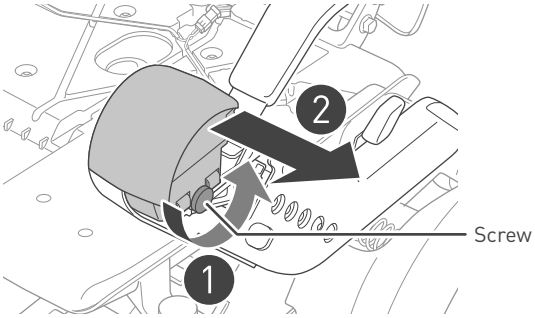

9. **Attach the round unit at the head of the arm that was removed in Step 8 to the opposite arm.**

   ❶ Insert the grooved part of the round unit to the arm then slide in the round unit.

   ❷ **Fix the round unit at the head of the arm firmly by using the screw that was removed in Step 8 with your hand.**

> Try to move the round unit at the head of the arm up, down, left, and right, and check that they are locked in place.

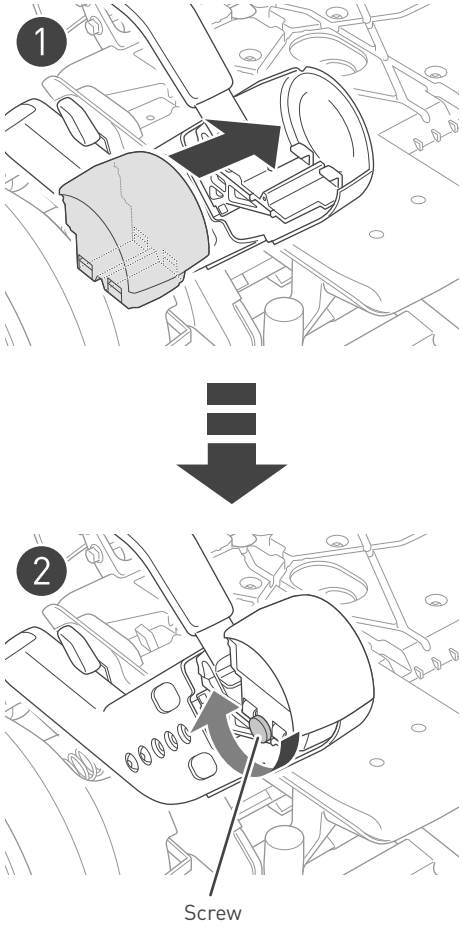

10. **Attach the control pad that was removed in Step 7 to the opposite arm.**

   ❶ **Insert the grooved part of the control pad to the projection on the arm, then slide the control pad.**

   ❷ **Fix the control pad firmly by using the screw that was removed in Step 7 with your hand.**

> Try to move the control pad up, down, left, and right, and check it is locked in place.

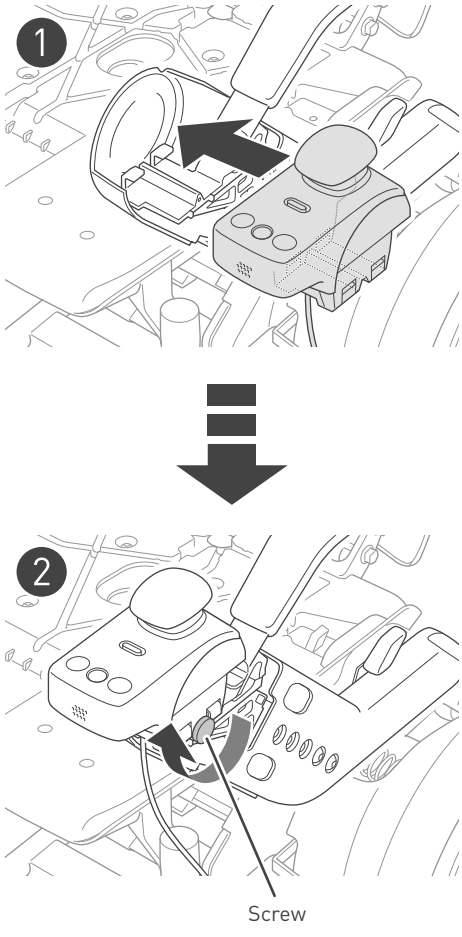

11. **Remove the cable from the slit of the seat assembly, then insert it in the opposite slit.**
Set the connector part of the cable in the indent on the cable-threading hole.

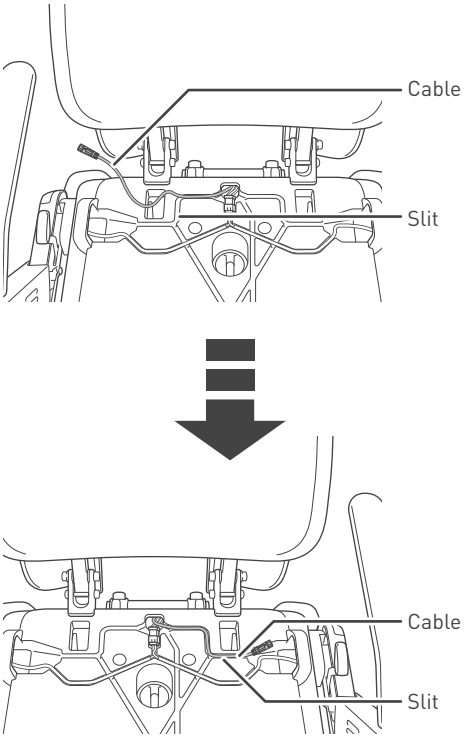

12. **Raise the arm, thread the cable through the arm, then thread it into the cable-threading hole on the seat assembly from the bottom.**

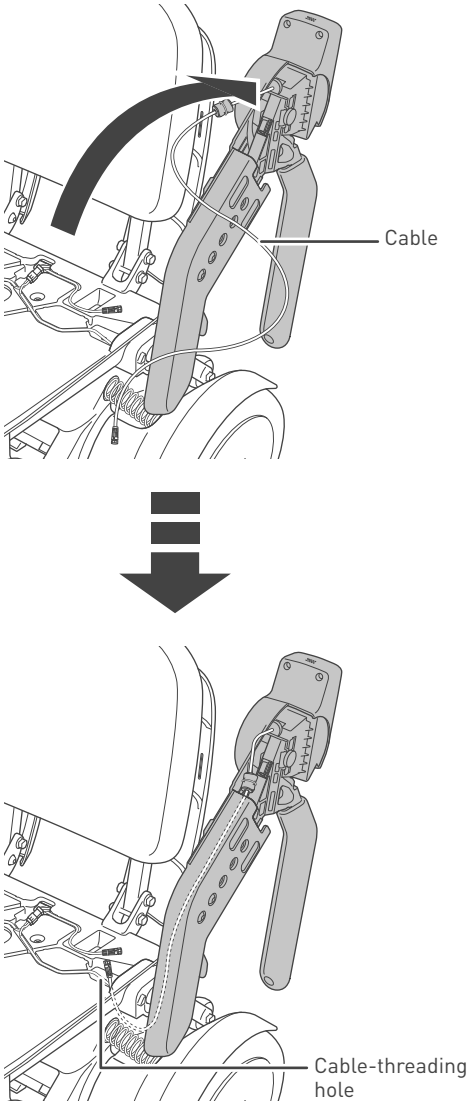

13. **Fix the cable in the cable clips (four places), then lower the arm.**

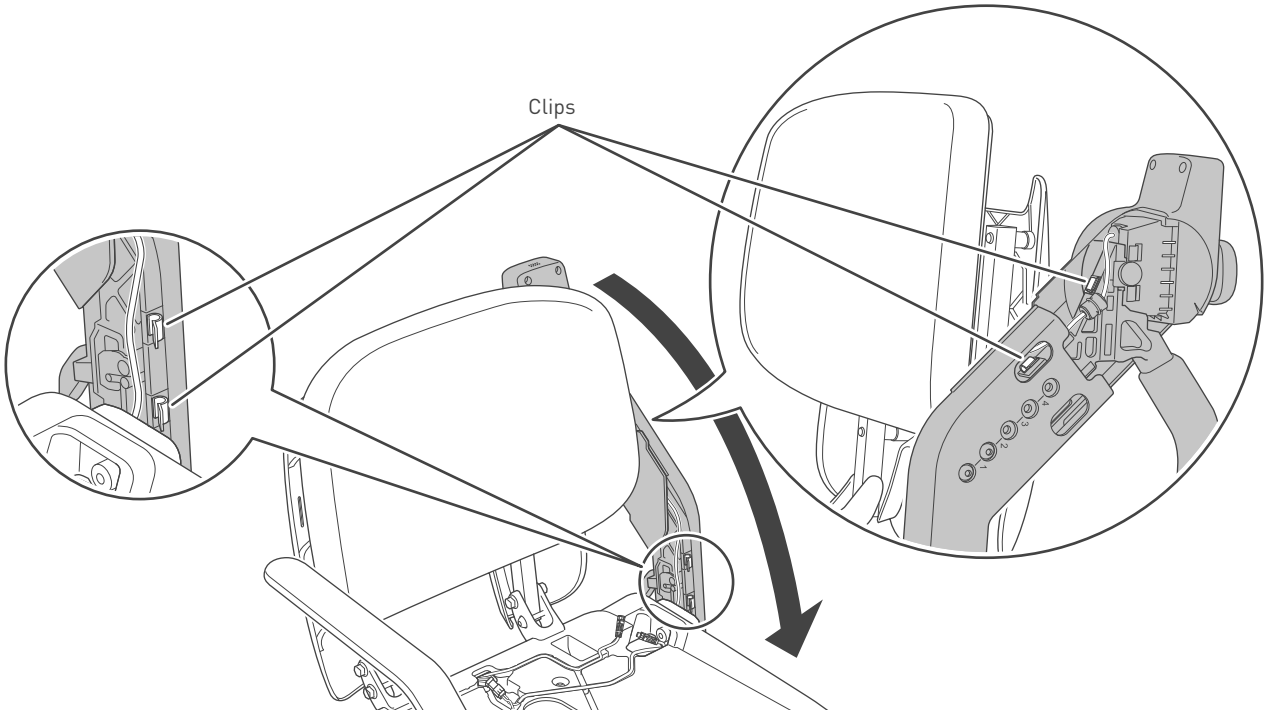

14. **Connect the connector of the cable.**

Insert the connector with the arrows of the connector aligned, then rotate the base lock of the connector clockwise to lock it.

> When connecting the connector, hold and rotate the base lock of the connector. Do not rotate other parts of the connector.

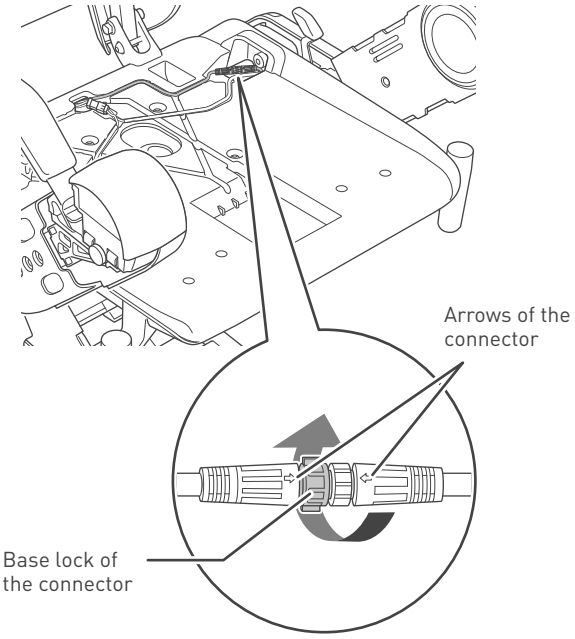

15. **Arrange the connector and cables in the cable-threading hole.**

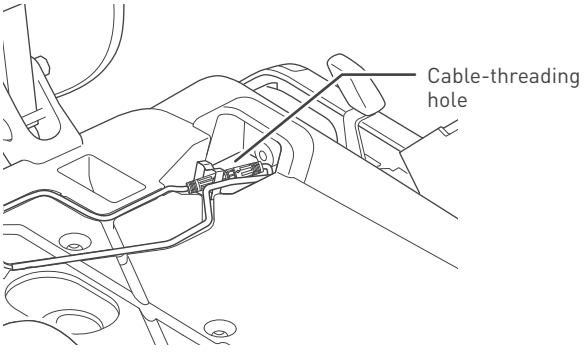

16. **Attach the arm covers to each arm.**
For the attaching procedure, refer to Step 6 in "5.3.1. Adjusting the arm length" on page 66.

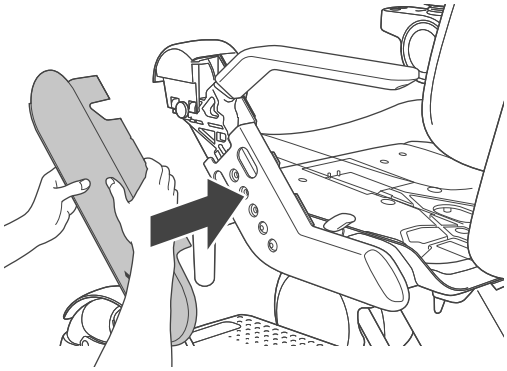

17. **Install the seat cushion onto the seat assembly.**

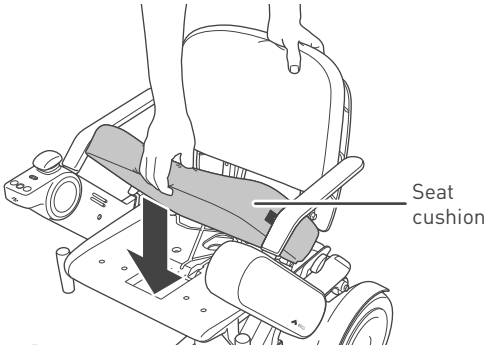

18. **Install the battery.**
For the installation procedure, refer to "5.2.4. Installing the battery" on page 64.

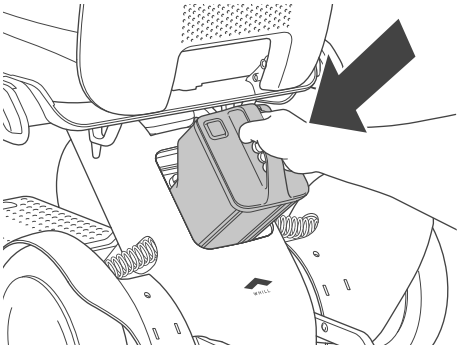

19. **Turn on the power and check that the device moves forward, backward, left, and right without problems.**

If an error appears on the display, check "9. Troubleshooting" on page 104. If the issue persists, contact your distributor or customer support.

5.3.3. Adjusting the seat height

⚠ WARNING

- **Persons who have an implanted pacemaker, implanted defibrillator, or other electrical medical devices on their bodies, must leave a minimum of 8 inches (20 cm) between themselves and the magnetic connectors.**
  The magnetic connectors are located at the connection between the seat assembly and rear drive base. The magnetism of the magnetic connectors may have an adverse effect on electrical medical devices.

- **Do not press a sharp object against or apply a load to the cables.**
  The damaged cable may cause malfunctions or unexpected device operation.

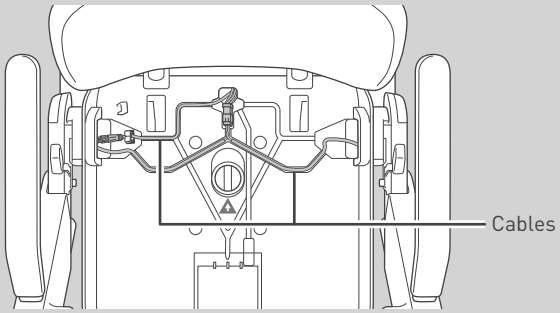

⚠ CAUTION

- **When adjusting the seat height, do not forcefully pull the seat post.**
  There is a cable inside the seat post. Forcefully pull the seat post may break the cable inside it.

1. **Remove the battery.**
   For the removal procedure, refer to "5.4.1. Removing the battery" on page 84.

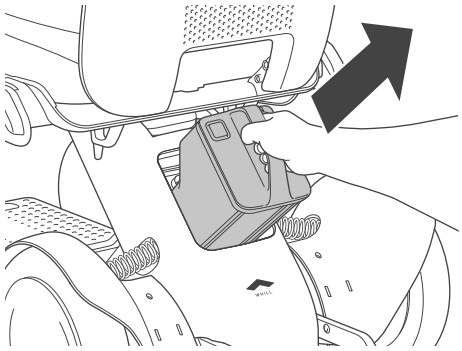

2. **Remove the seat assembly.**
For the removal procedure, refer to "5.4.2. Removing the seat assembly" on page 85.

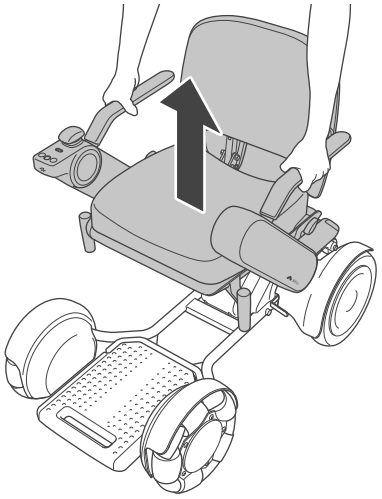

3. **Remove the seat post bolt with the specified tool.**
Tool: hex wrench #8

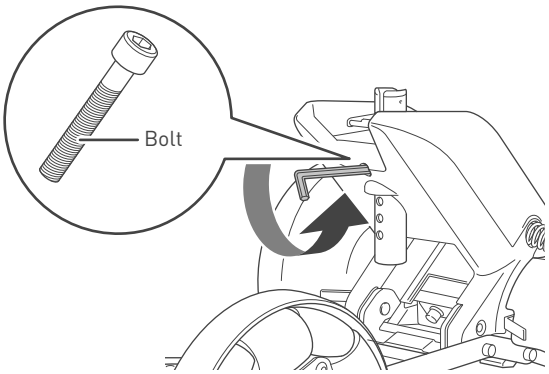

4. **Move the seat post up or down and align it with the hole that you want to adjust it to.**
The seat height can be adjusted in 5 stages.
When adjusting, do not forcefully pull the seat post.

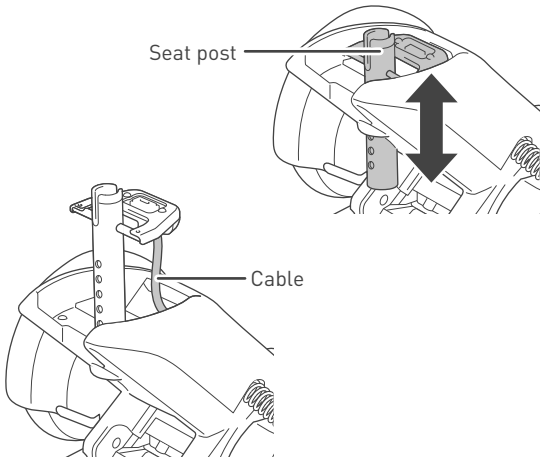

5. **Insert the bolt that was removed in Step 3 into the hole at the desired height and tighten it securely with the specified tool.**
If a bolt is loose, tighten it.
Tool: hex wrench (or hex torque wrench) #8
Tightening torque: 25 Nm

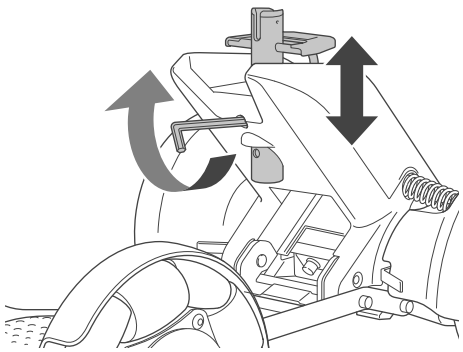

6. **Install the seat assembly.**
   For the installation procedure, refer to “5.2.3. Installing the seat assembly” on page 61.

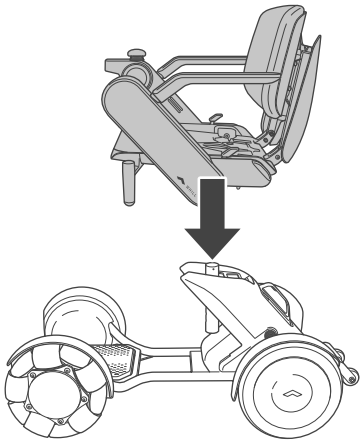

7. **Install the battery.**
   For the installation procedure, refer to “5.2.4. Installing the battery” on page 64.

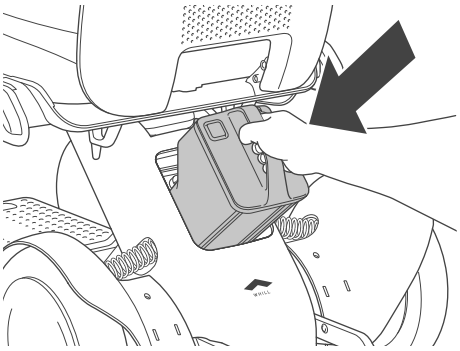

5.3.4. Adjusting the back support height

⚠ CAUTION

- **When moving the back support up or down in order to adjust the back support height, be careful that your fingers do not become caught in the hinge.**
  There is a risk of injury.

1. **Remove the battery.**
   For the removal procedure, refer to "5.4.1. Removing the battery" on page 84.

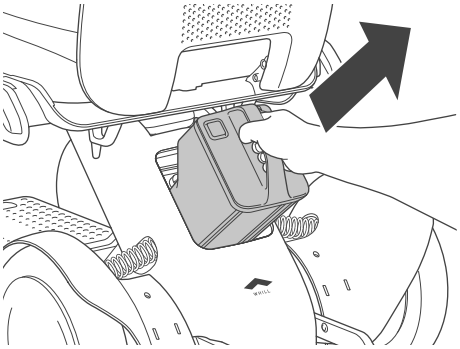

2. **Remove the back support cushion.**
   Detach the hook and loop fasteners and leave the back support cushion behind the back support.

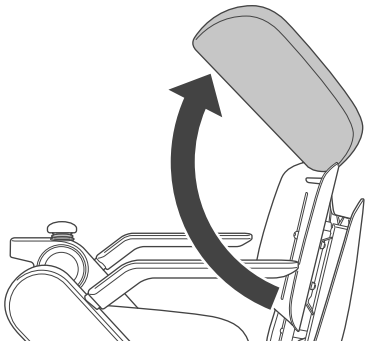

3. **Loosen the 4 bolts with the specified tool.**
   Tool: hex wrench #5
   It is not necessary to remove the bolts all the way.

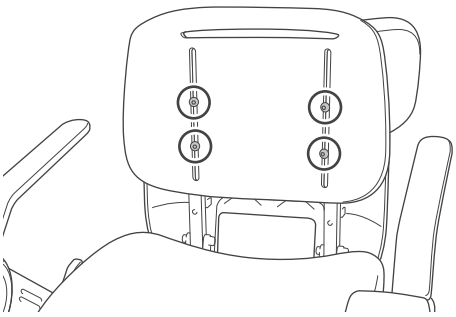

4. **Move the back support up or down to adjust it.**

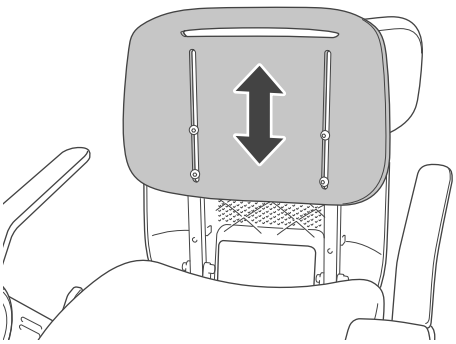

5. **When it is at the desired height, tighten the loosened bolts.**

   Set the back support to the appropriate height and tighten the bolts firmly with the specified tool. If a screw is loose, tighten it.
   Tool: hex wrench (or hex torque wrench) #5
   Tightening torque: 5 Nm

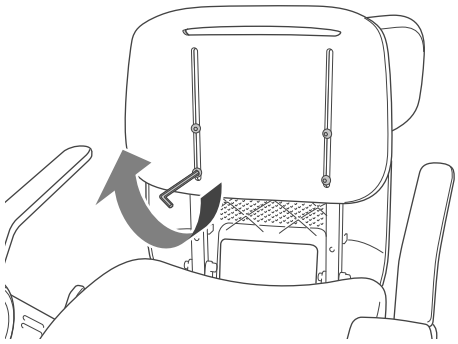

6. **Install the back support cushion.**

   Return the back support cushion to its original position and attach the fasteners.

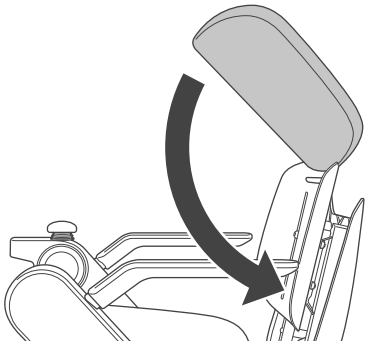

7. **Install the battery.**

   For the installation procedure, refer to “5.2.4. Installing the battery” on page 64.

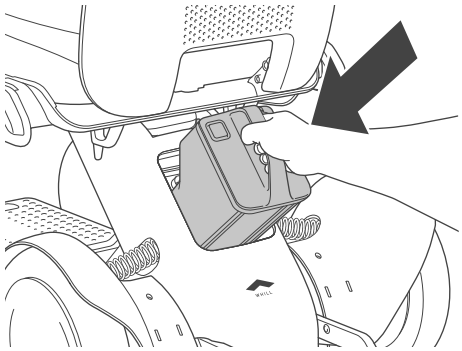

5.3.5. Adjusting the back support angle

1. **Remove the battery.**
   For the removal procedure, refer to “5.4.1. Removing the battery” on page 84.

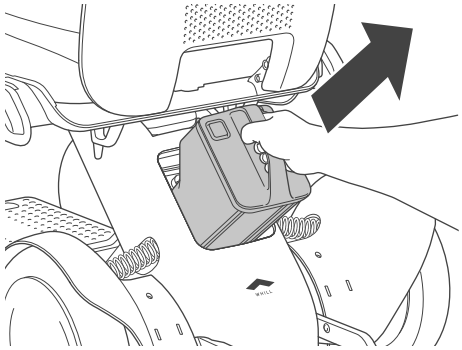

2. **Remove the seat cushion.**

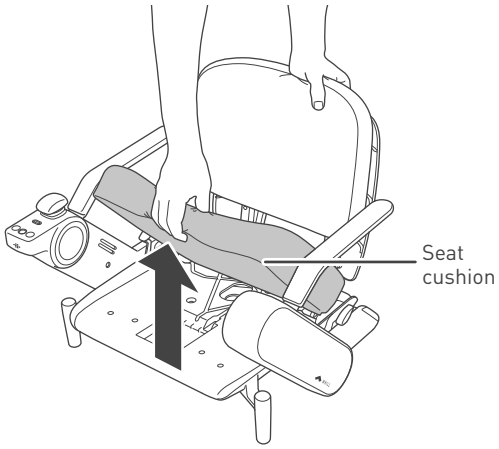

3. **Tilt the back support forward slightly.**

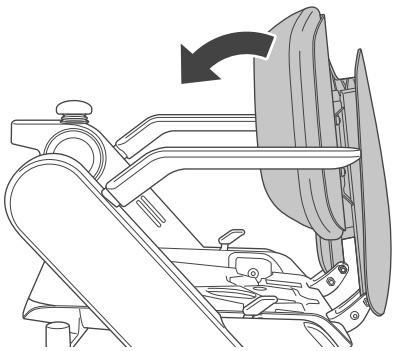

4. **Remove the two back support adjustment bolts with the specified tools.**

Tool (for the screw): hex wrench #5
Tool (for the nut): wrench #10
When removing the back support adjustment bolt, hold the nut with a wrench.

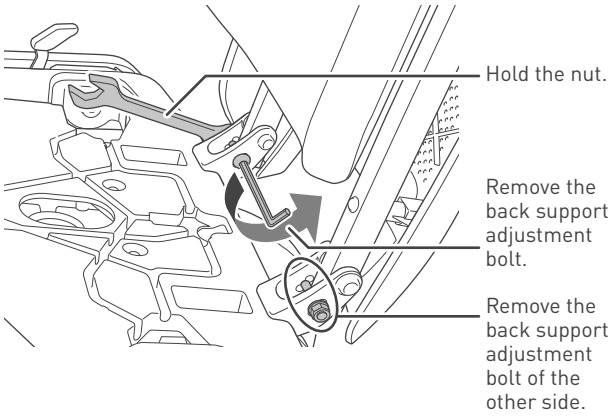

WARNING



Inserting a finger or other body part into the connecting components and moving parts of this device may result in an injury.
When assembling, adjusting, disassembling, and transporting this device, do not touch any component other than those indicated in the manual.

5. **Insert the two back support adjustment bolts into the desired holes.**

The back support can be adjusted in 3 stages (90°, 95°, 100°).

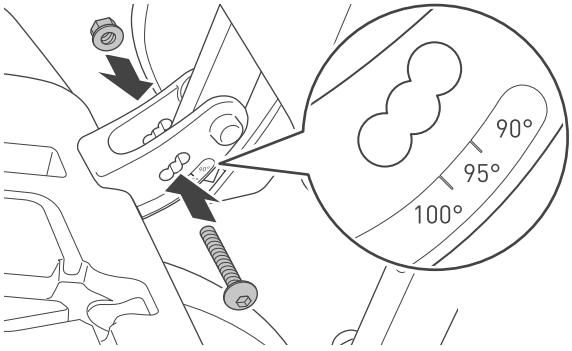

Be sure to adjust the left and right side to the same angle.

6. **Fix the back support by fastening the two back support adjustment bolts.**

Set the back support to the appropriate angle and tighten the bolt firmly with the specified tool. If a bolt is loose, tighten it.
Tool (for the screw): hex wrench (or hex torque wrench) #5
Tool (for the nut): wrench #10
Tightening torque: 5 Nm
When fastening the back support adjustment bolt, hold the nut with a wrench.

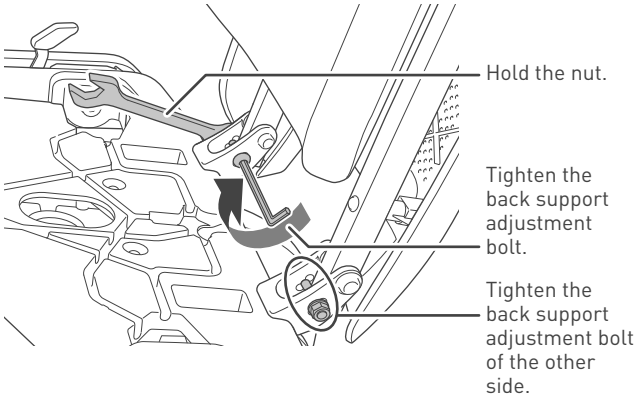

7. **Install the seat cushion onto the seat assembly.**

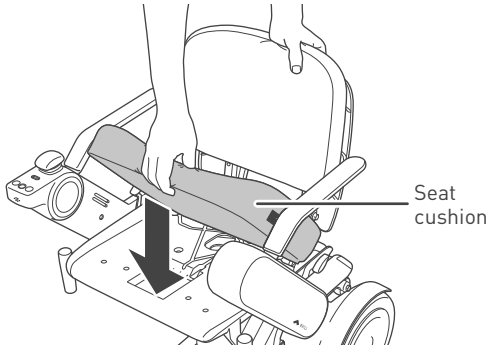

8. **Install the battery.**
   For the installation procedure, refer to “5.2.4. Installing the battery” on page 64.

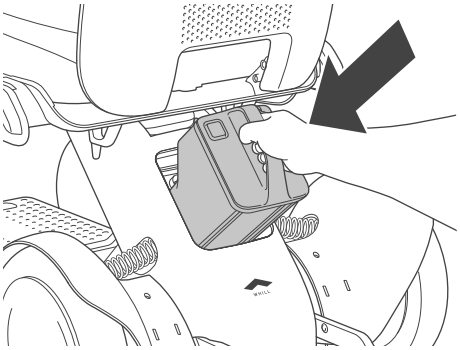

5.4. Disassembly procedures

Disassembly of the device does not require tools. When disassembling the device, pay careful attention to the following.

For the methods of transporting the disassembled components, refer to “6.2. Transport” on page 91.

⚠ WARNING

- **Perform disassembly on a flat and level surface with the battery removed and brakes locked.**
  There is a risk of accident.

- **Do not touch the connectors directly, allow them to become wet, or bring any metal or other foreign objects close to them. Ensure that there are no foreign objects when assembling.**
  There is a risk of injury or electric shock as well as damage to the device or its components.

⚠ CAUTION

- **When disassembling the device, grab only the handle and part as described in this manual, and do not hold the device at any other areas.**
  There is a risk of hand injury if it gets caught in the device.

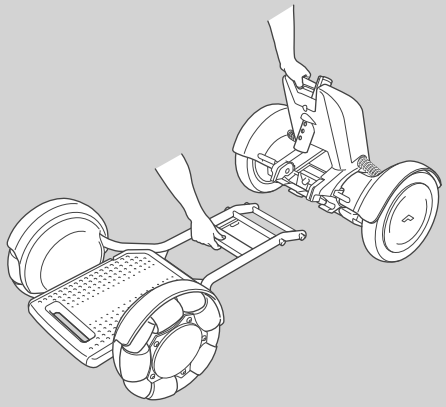

5.4.1. Removing the battery

1. **Check that the device power is off.**

2. **Press the battery lock release button.**

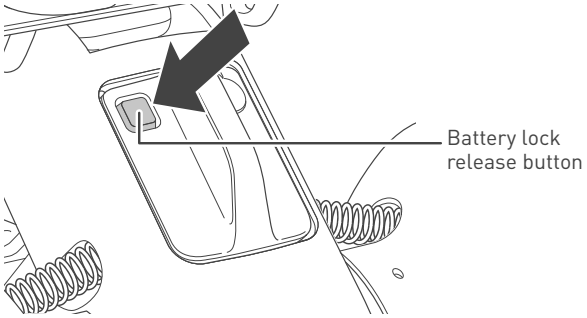

3. **Grasp the handle and pull it toward you to remove the battery.**

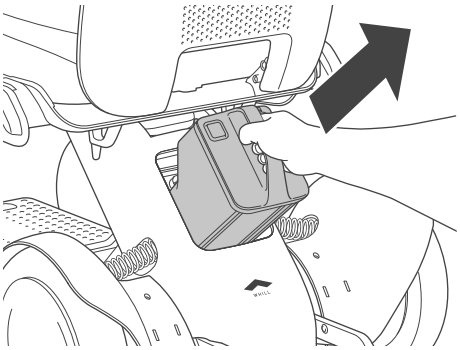

> The battery weighs 6.0 lbs (2.7 kg). Handle the battery with care – dropping it will increase a risk of injury and damage to the battery.

5.4.2. Removing the seat assembly

⚠ WARNING

- **Persons who have an implanted pacemaker, implanted defibrillator, or other electrical medical devices on their bodies, must leave a minimum of 8 inches (20 cm) between themselves and the magnetic connectors.**
  The magnetic connectors are located at the connection between the seat assembly and rear drive base. The magnetism of the magnetic connectors may have an adverse effect on electrical medical devices.

- **Do not sit on the control pad, place the removed seat assembly upside down, or apply an excessive load to the control pad.**
  There is a risk that the control pad may be damaged, rendering the device inoperable.

- **Do not press a sharp object against or apply a load to the cables.**
  The damaged cable may cause malfunctions or unexpected device operation.

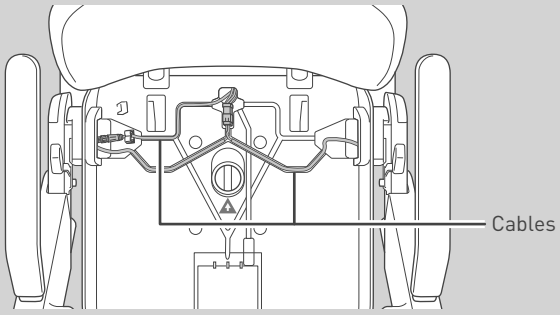

1. **Pull up the seat release lever on the bottom of the seat assembly toward you.**
   The seat assembly is unlocked.

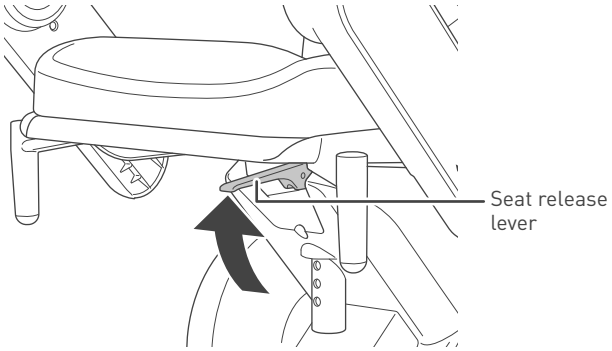

Exercise caution. If using a knee on the foot rest or apply any weight to the foot rest, the device may tip over.

2. Grab the arm rests and lift the seat assembly straight up to remove it from the rear drive base.

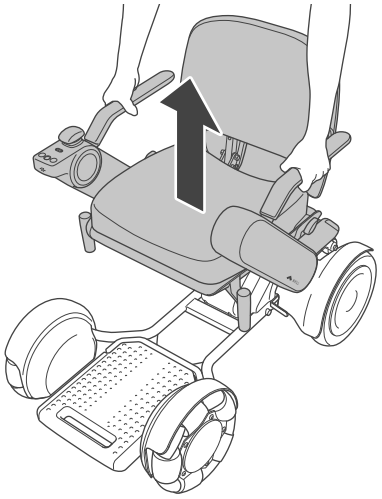

> Lift the seat assembly slowly so that it does not damage other parts.

3. Set the removed seat assembly on the floor with the cushion side facing up.

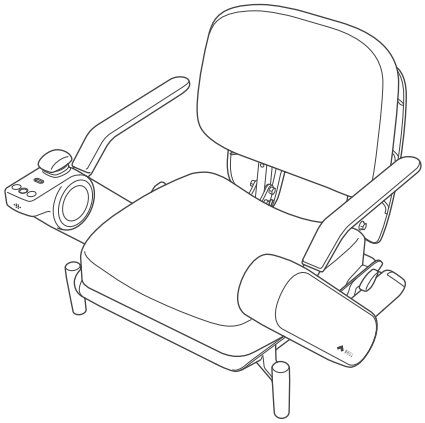

> **WARNING**
>
> If the removed seat assembly is placed upside-down, there is a risk that the control pad may be damaged, rendering the device inoperable.
> When placing the seat assembly on the floor, place it with the cushion facing up and be careful not to apply an excessive load to the control pad.



5.4.3. Removing the storage basket

This section can be ignored when the storage basket is not used.

1. **Remove all items in the storage basket.**

2. **Lift the storage basket straight by holding the handles of the storage basket and detach it from the front drive base.**

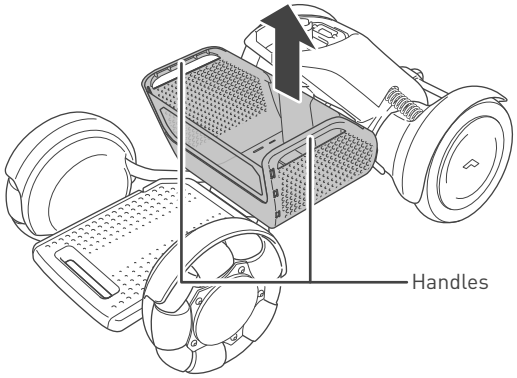

5.4.4. Removing the front drive base

The disassembly procedure is indicated on the label.

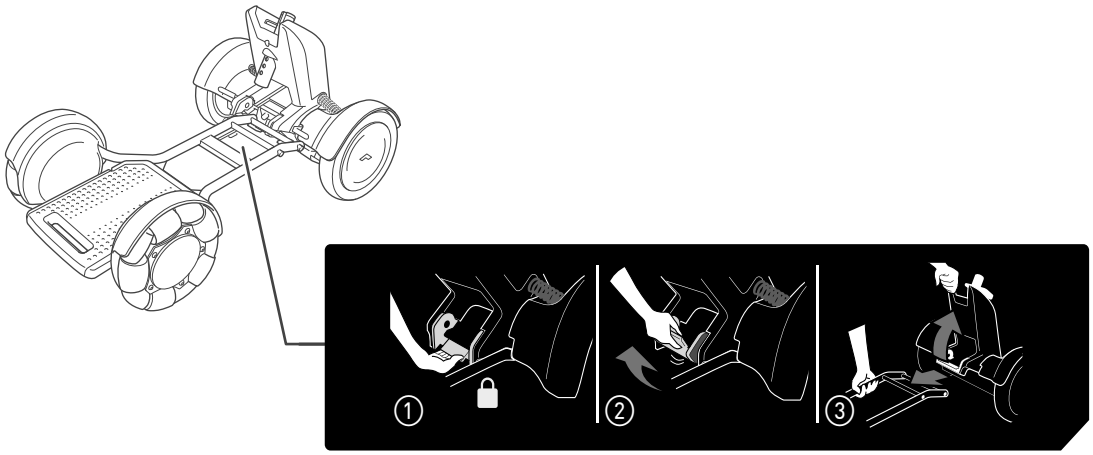

5

1. **Raise the base release handle.**
   The lock between the front drive base and rear drive base is released.

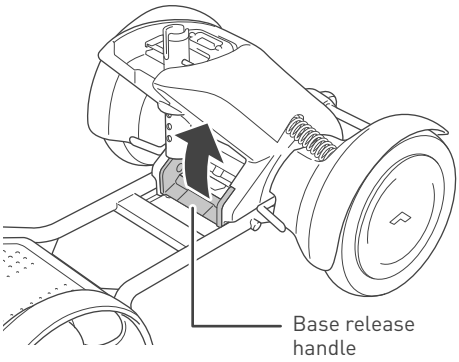

2. **Grab the handle in the central area of the front drive base and disconnect Bar B on the top of the front drive base from the hook of the rear drive base.**

Support the rear drive base with a hand while disconnecting so that the rear drive base does not fall over.

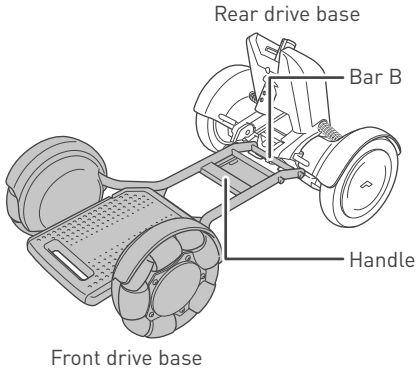

6. Storage and transport methods

6.1. Storage

Pay attention to the following when storing this device.

- Do not store it near flame or flammable gas.
- Store in a location with an ambient temperature of -15°C and 40°C (5 °F and 104°F). We recommend storing the battery and charger between 0 and 40 °C (32 and 104 °F) which is the designated charging temperature.
- Store in a location with the humidity between 8% and 90%.
- Do not lay the device on its side.
- Store the device indoors or covered.

⚠ CAUTION

- **If the device is not used for a long period, ensure the battery is fully charged before storing. Charge the battery at least once a month.**
  There is a risk that the battery may get excessively depleted and cannot be charged.

- **Do not store the device for a long period of time in a location with heavy amounts of dust or sand, near the sea, or in a hot spring area.**
  There is a risk of foreign objects entering the device and corroding the frame and screws.
- **Do not store the device with a heavy object placed on it for a long period.**
  There is a risk of device malfunction.
- **Do not place the battery or device in a location that is inclined, in a vibration-prone area, on a high shelf, or in other similar places.**
  There is a risk of damage to or deformation of the battery or device.
- **When storing the product with the battery removed, be careful not to allow foreign objects or moisture to enter the connection between the battery and the main unit.**
- **Do not store the device or storage basket outdoors in a location exposed to direct sunlight or rain.**
  There is a risk that rain may cause a short circuit, and that direct sunlight may cause deformation or deterioration of the device or storage basket. Store them indoors or in another location under a roof.

■ When storing for a long period

When storing for a month or longer, remove the battery from the device and fully charge it. At least once a month, charge the battery and check that the device operates correctly.
When using this device again after a prolonged period of disuse, charge the battery before using it, and be sure to check that the device operates correctly.

6.2. Transport

Pay attention to the following when transporting this device.

- When carrying the device by hand, grab the designated handles and do not hold it by any other part.
- When using public transportation, follow the rules of the public transportation agency.
- The unoccupied device is suitable for land and air transport.

⚠ WARNING

- **Do not hoist the device when there is a person on the device. Always disassemble the device before lifting it. Be careful of the weight when lifting each component. Do not lift the component by holding the battery handle while the battery is inserted.**
  There is a risk of injury to the user and damage to the device.
- **Do not use the device as a seat in an automobile or other vehicle.**
  There is a risk of damage to the device, causing an accident.
  The symbol on the right indicates that the device is not intended to be used as a seat in a motor vehicle.



- **Do not attempt to maneuver the device onto an incline if the anti-tip bar touches the ground on the incline. When the anti-tip bar touches the ground it means that the incline is too steep for the device.**
  Maneuvering the device when the anti-tip bar is in contact with the ground or if the incline is extremely dangerous will cause the device to lose control.

⚠ CAUTION

- **When transporting the device or its components in an automobile trunk or other vehicles, make sure that each component is safely secured.**
  There is a risk of damage to the device.
- **When using a wheelchair lift for vehicles, be sure to fasten the device securely.**
  There is a risk of the device falling, causing damage to the device.

- The device has not been tested against the limits specified in the Technical Specification for Interoperability relating to Accessibility for Persons with Reduced Mobility (PRM-TSI).
- Should you travel with your device on a commercial aircraft, contact the airline in advance for confirmation of the boarding procedure. You may be asked by the airline to provide the specifications of the device. Information on the device relevant to air travel is available for download from the FAQ section on the WHILL website. Please note that some airlines may refuse to transport your device.

6.2.1. How to hold each component

When transporting the device disassembled, hold the specified part of each component.

■ Seat assembly

⚠ WARNING

- **Persons who have an implanted pacemaker, implanted defibrillator, or other electrical medical devices on their bodies, must leave a minimum of 8 inches (20 cm) between themselves and the magnetic connectors.**
  The magnetic connectors are located at the connection between the seat assembly and rear drive base. The magnetism of the magnetic connectors may have an adverse effect on electrical medical devices.



- **Do not touch the connectors directly, allow them to become wet, or bring any metal or other foreign objects close to them. Ensure that there are no foreign objects when assembling.**
  There is a risk of injury or electric shock as well as damage to the device or its components.
- **Do not press a sharp object against or apply a load to the cables.**
  The damaged cable may cause malfunctions or unexpected device operation.

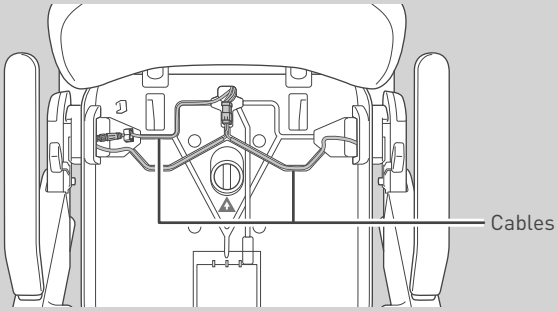

1. **Carry by holding the arm rests.**

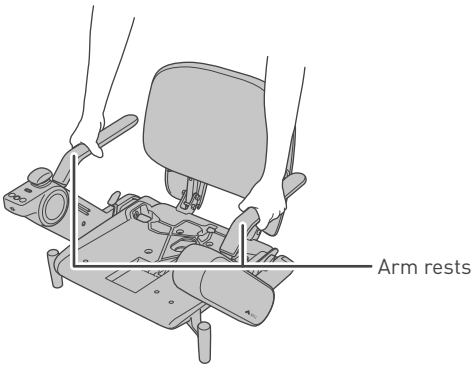

■ Front drive base

1. **Carry by holding the handle of the foot rest and the bar B of the front drive base.**

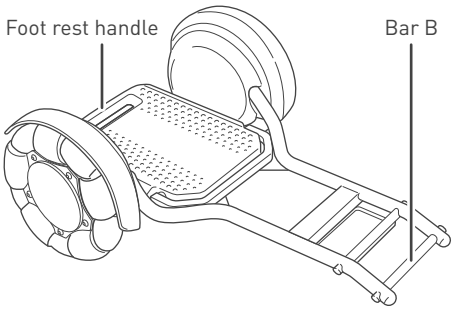

■ Rear drive base

⚠ WARNING

- **Do not touch the connectors directly, allow them to become wet, or bring any metal or other foreign objects close to them.**
  There is a risk of injury or electric shock as well as damage to the device or its components.

1. **Carry by holding the handle on top of the rear drive base and the anti-tip bar.**

> The rear drive base will fall forward without support.

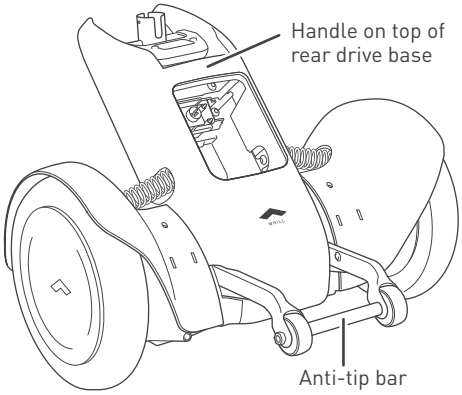

7. About the smartphone app

By installing the WHILL app on the device with iOS of Apple Inc. (iPhone, iPad, etc.) or smartphone with Android OS of Google LLC, it is possible to configure the settings of WHILL Model C2 from the app via Bluetooth Low Energy (BLE). The device utilizes Bluetooth Generic Attribute Profile (GATT) for communication.
The app can be used to lock, unlock, and control the device. Use the app within connectable distance (approximately 10 m, varying depending on environment) close to the device, otherwise degradation of wireless function (e.g., remote control, firmware update) may occur. You can put the device out of the way after getting off or move the device without getting on/off the device when storing the device in a narrow place by using the remote control function of the app. For the safety information regarding radio frequency interference, refer to "1.1. EMI (Electromagnetic Interference)".
Time synchronization of WHILL Model C2 with the local time can also be accomplished via the app over BLE connection, but this function can only be executed by WHILL. Depending on your region, time, or smartphone type, the app may not be offered or some functions may not be used.
The paper slip where the App pairing password is printed is placed in the indent of the seat. Attach it to the last page of this manual so that you do not lose it. Ensure not to attach the slip to the device.

⚠ CAUTION

- **Ensure the device is functional in a safe space each time after setting and adjusting the speed.**
  There is a risk of unintended movement of the device.

8. Maintenance and inspection

⚠ WARNING

- **Do not perform any disassembly, adjustment, repair, or modification that is not listed in this manual.**
  There is a risk of injury and product safety risk due to damage to the device or its parts.
  Performing repair or modification which is not listed in this manual will invalidate the warranty.

- Consult with your distributor when adjusting the seat height, back support height/angle, or arm position. Only a trained service technician is permitted to perform maintenance on the device.
- The maintenance manual is only available to service providers and not to individual users.

8.1. Cleaning, disinfection and user maintenance

Perform the following to keep the device clean.

- If there is a significant amount of dirt on the exterior or wheels, wipe it away with a wet towel. Pay attention when washing the wheels off with water.
- If the dirt is tough to remove, use a neutral detergent. Avoid the use of petroleum-based solvents.
- Use a cloth moistened with 70% ethyl alcohol disinfectant and carefully wipe the affected parts.
- Replace the front wheel when the treads are worn down by less than 1/64 inches (0.5 mm) or the metal of the core part is exposed. Replace the rear wheel when the treads are worn down by less than 1/64 inches (0.5 mm).

⚠ WARNING

- **Wash only the wheels of the device with water and not the device or its other parts.**
  There is a risk of malfunction due to electric shock, short circuit, and corrosion.

⚠ CAUTION

- **Do not use paint thinner, benzene, or other organic solvents for cleaning, and do not use a high-pressure washer.**
  Doing so may result in discoloration, deformation, deterioration, and damage.
- **Do not insert a sharp object into the speaker holes.**
  Doing so may damage the control pad.
- **Do not apply commercially available grease or oily antirust agent/wax, etc. to the moving parts or connections of the device.**
  There is a risk that the stickiness of such substances may cause sand or other foreign substance to enter the device, causing device malfunction.

- If an abnormal appearance such as a crack is found, contact your distributor or customer support.
- White stains may be observed on the rollers of the product's front wheel (omni-wheel). They are wax components in the rubber rising to the surface, and do not pose a quality problem. If you are concerned about the appearance, please wipe them off with a wet cloth.

8.2. Replacing the smart key battery

When the display indicates that the smart key battery level is low, follow the procedure below and replace the smart key battery. Perform this procedure carefully because there is a risk of device malfunction if a heavy load is applied. Use a CR2032 3V battery (commercially available) for the button battery.

When the smart key battery level is low, the indication on the right is shown on the control pad display.



1. **Cover the tip of a flathead screwdriver with a cloth then insert the tip into the hole in the case to open the case.**

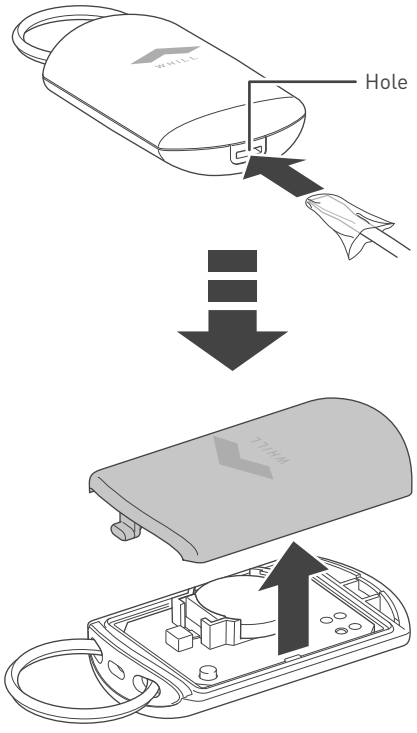

2. Pull back the terminal and remove the old battery from the battery case.

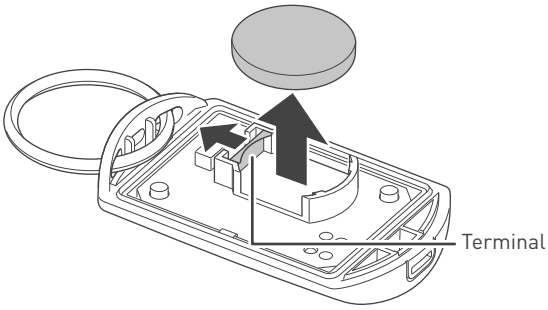

3. Pull back the terminal and install a new battery under the rib in the battery case.

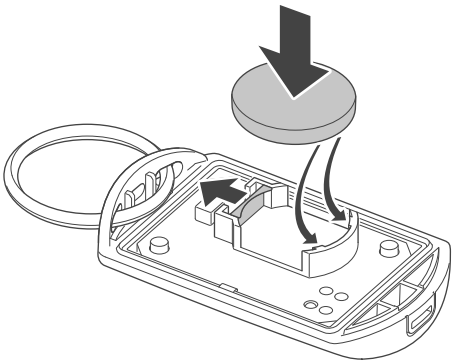

4. Install the case.

   ❶ Insert the tab into the hole.

   ❷ Press the opposite side of the case with the WHILL logo on it in order to fit it into place.

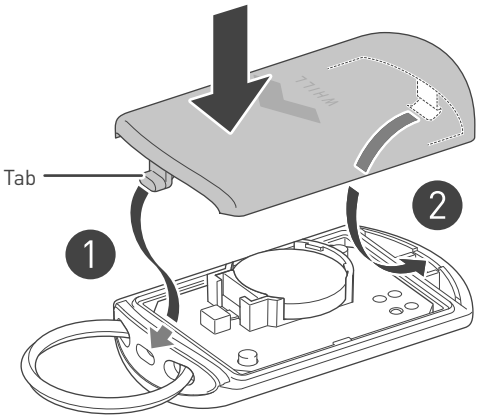

8.3. Reinstalling the joystick

If the joystick comes off the control pad, follow the procedure below to reinstall it.

1. **Fit the joystick in place 90° relative to the direction of forward travel.**

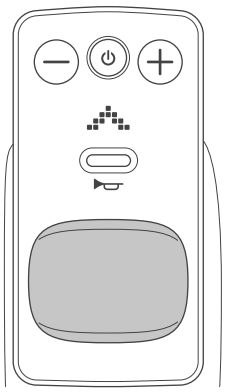

2. **Rotate the joystick clockwise by 90°.**

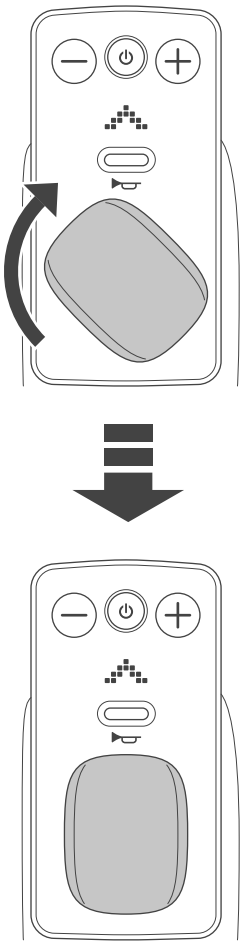

8.4. Inspection

It is recommended that you have the device inspected approximately once every 6 months by your distributor.
For details, consult your distributor.

8.5. Repair, maintenance, and parts replacement performed by the manufacturer or distributor

If repair, maintenance, or parts replacement is necessary, contact your distributor or customer support.
The following maintenance can be performed by the distributors.

- Replacement of the back support
- Installation of a lap belt (Sold separately. Equipped with standard items depending on the area/countries.)

The following components can be removed from the device and repaired individually.

- Seat assembly
- Rear drive base
- Front drive base

For details, contact your distributor or customer support.

⚠ WARNING

- **Replace the anti-tip bar if it becomes deformed.**
  There is a risk that it may lose its functionality and the device may tip over.
- **If the device shows any abnormal signs, immediately discontinue use, and contact the distributor or customer support.**
  Using the device when it is malfunctioning can potentially cause an injury or accident.

⚠ CAUTION

- **If a component becomes worn or requires replacement, contact your distributor.**
  There is a risk of damage to the device that renders it inoperable.

8.6. Disposal

When disposing of the device and its parts, be sure to follow the local disposal guidelines. If there is anything that is unclear, consult your distributor or customer support.

8.7. About warranty information

For WHILL Model C2 warranty information, check its warranty.

8.8. Reuse information

The wheelchair is suitable for reuse. Before the wheelchair is passed on to another user, it must be serviced and hygienically prepared by a specialist dealer. When passing on the wheelchair, please remember to give these operating instructions and the address of your specialist dealer to the new user.

8.9. How to find manufacturing month and year of WHILL Model C2 device

■ Device

Check the 8th to 10th digits of the serial number on the white frame of Primary Identification Label (see page 20).

Content	Year	Month
Numbers to check	8th and 9th digits	10th digit
Meaning	20: 2020 21: 2021 22: 2022 23: 2023 24: 2024 25: 2025 26: 2026 27: 2027 28: 2028 29: 2029	1: Jan 2: Feb 3: Mar 4: Apr 5: May 6: Jun 7 : Jul 8 : Aug 9 : Sep A: Oct B: Nov C: Dec

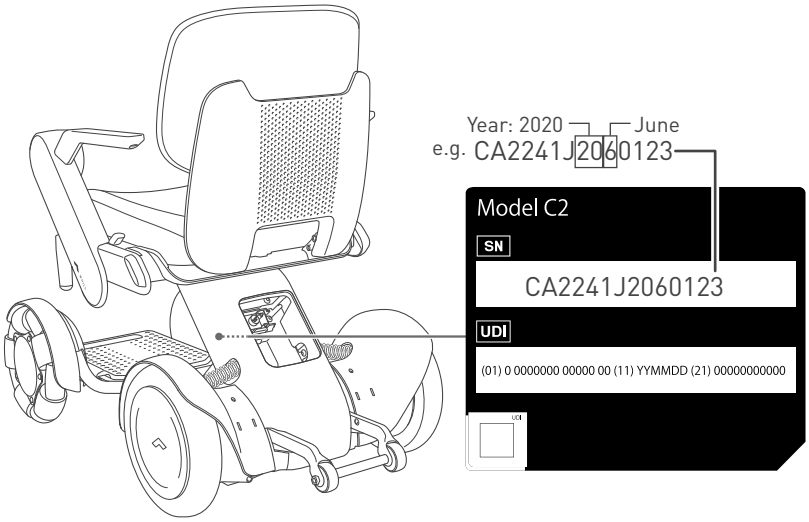

■ Battery

Check the 4th to 6th digits of the 16-digit serial number printed in the white frame of the battery label.

Content	Year	Week
Numbers to check	4th digit	5th and 6th digits
Meaning	0: 2020 5 : 2025 1: 2021 6 : 2026 2: 2022 7 : 2027 3: 2023 8 : 2028 4: 2024 9 : 2029	01 to 52

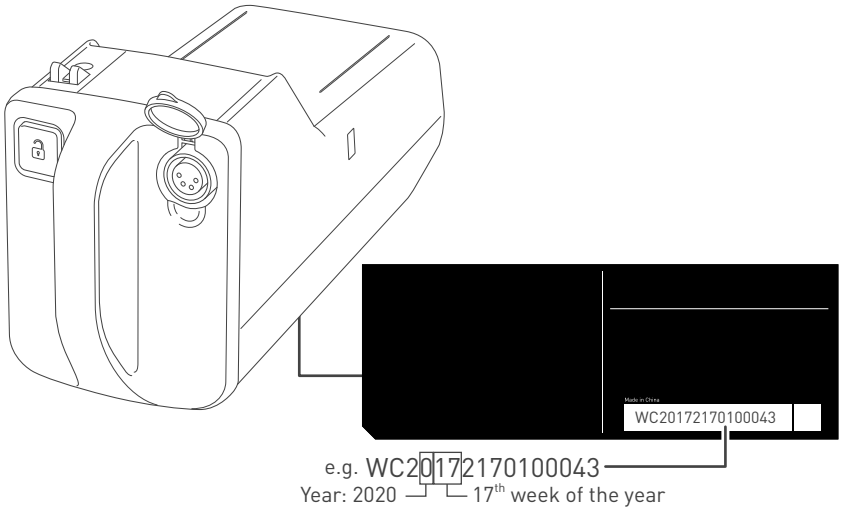

■ Charger

Check the 5th and 6th digits of the 11-digit serial number printed in the white frame on the battery charger label.

Content	Year	Month
Numbers to check	5th digit	6th digit
Meaning	0: 2020 5 : 2025 1: 2021 6 : 2026 2: 2022 7 : 2027 3: 2023 8 : 2028 4: 2024 9 : 2029	1: Jan 7 : Jul 2: Feb 8 : Aug 3: Mar 9 : Sep 4: Apr A : Oct 5: May B : Nov 6: Jun C : Dec

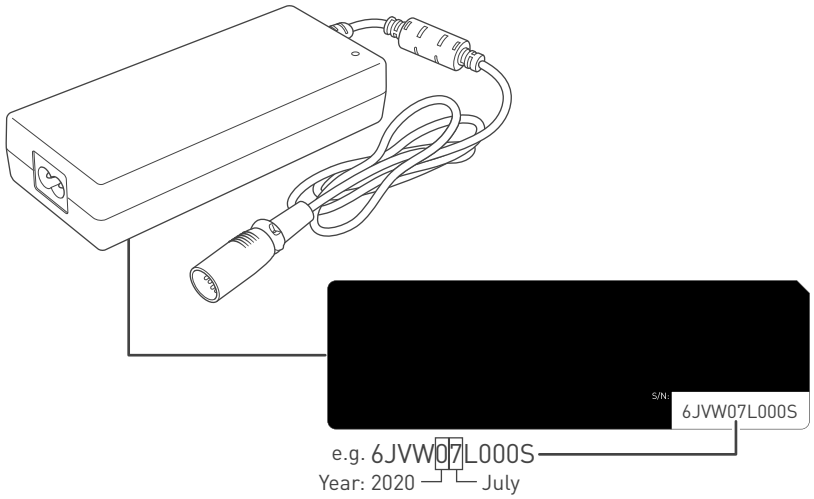

8

9. Troubleshooting

In the event of certain issues with the device, an error code will appear on the display.

The following is an explanation of the error display contents, causes, and resolutions.

Behavior of the device	Error code	Cause	Resolution
The display shown on the right appears.		Operation of control pad attempted while arm is rotated upward.	Set the control pad to the driving position and restart.
		The joystick was not in neutral position when the power was turned on.	Turn the power back on without touching the joystick.
		The brake levers are disengaged.	Lock the brakes and turn the power on again.
		The charger was connected while the power was on, or the device was turned on while connected to the charger.	Disconnect the charger from the battery.
		The battery charge level is low.	Recharge the battery.
The maximum speed decreases.		The battery temperature dropped significantly.	Store the battery in room temperature or at least in an ambient temperature of above 0°C (32°F) until the battery temperature rises above 0°C (32°F).
The maximum speed recovers.		The battery temperature rose above 0°C (32°F).	
The error code listed on the right and a warning sound are observed.		The smart key battery level is low.	Replace the smart key battery.
The error code listed on the right and a warning sound are observed.		The device may be on a steep uphill slope. (The angle of the slope on the display is for reference only.)	The device may be on a slope unsafe to operate. Please move slowly to a place where the slope is gentle while checking your safety. Once warning sound is made, it will not be made again for about two minutes.

Behavior of the device	Error code	Cause	Resolution
The device does not turn on. Neither the display or the tail light* illuminates. * Sold separately. Equipped with standard items depending on the area/ countries.	N/A	The battery is out of charge.	Charge the battery.
		The battery is not fully inserted into the battery compartment on the rear drive base.	Insert the battery all the way in.
			Remove the battery, then attach the battery again after 10 seconds.
		There are foreign substances in the connectors between the seat assembly and the rear drive base.	Check and remove any foreign substances around the connector pins. The connectors may not function when they are dirty, and the device may not turn on.

Behavior of the device	Cause	Resolution
The arm release lever cannot be returned or is difficult to move.	There are foreign substances such as dust in the root part of the arm and the arm release lever cannot be moved.	Inspect the root part of the arm and clean with a brush or air duster.
	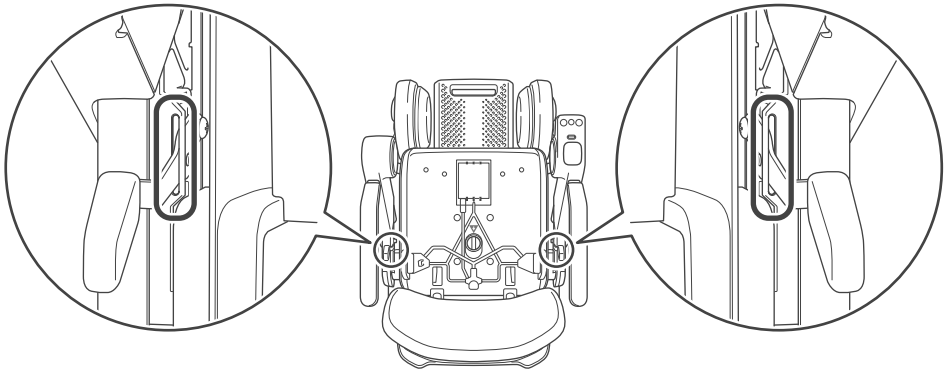	

- Numerical error codes are displayed with a red vertical line.
- If an unlisted error is displayed or the issue persists even though a problem was handled in line with troubleshooting, contact your distributor or customer support.



10. Specifications and test results

10.1. Specifications

■ Device

Device name	WHILL Model C2
Name and address of the manufacturer	WHILL, Inc. 2-1-11 Higashishinagawa, Shinagawa-ku, Tokyo 140-0002, Japan
Maximum weight limitation including occupant and any carried items	16-inch seat: 115 kg (253 lbs); 18- and 20-inch seat: 136 kg (300 lbs)
Wheelchair class	A
Drive type	2-wheel drive
Speed changes	4 stages
Brake type	Electromagnetic brakes
Type of front wheels	Omni-Wheel/Outside diameter 257 mm (10 7/16 inches)
Type of rear wheels	Standard: Airless tire/Outside diameter 265 mm (10 1/8 inches)
Arm	Lift-up type
Maximum allowable inclination	10°
Driving range (cruising distance)	20 km (12.4 miles)
Tail light (Sold separately. Equipped with standard items depending on the area/countries.)	LED lamp (red)
Charging time	5 hours
Operating temperature	-15 to 40°C (5 to 104 °F)
Operating humidity	8 to 80%
Pivot width	760 mm (29.9 inches)
Force needed to operate joystick	1 N
Estimated Lifetime	5 years
Noise produced by the device and level thereof	Below 65dBA except audible warning device

■ Battery (Dedicated for Model C2 Series)

Name and address of the battery manufacturer	WHILL, Inc. 2-1-11 Higashishinagawa, Shinagawa-ku, Tokyo 140-0002, Japan
Battery type	Lithium-ion battery
Nominal voltage	25.3 V
Rated capacity (5-hour rate)	10.6 Ah

■ Battery charger (Dedicated for Model C2 Series)

Name and address of the battery charger manufacturer	WHILL, Inc. 2-1-11 Higashishinagawa, Shinagawa-ku, Tokyo 140-0002, Japan
Rated power	100-240 V, 50/60 Hz
Rated DC output current	2.4 A
Rated DC output voltage	28.49 V
Operating temperature and charging temperature	0 to 40°C (32 to 104 °F)
Supported battery type	WHILL Model C2 Series Lithium-ion battery
Rated capacity of battery counterpart (5-hour rate)	10.6 Ah
DC connector pinout	Pin 1: +
	Pin 2: -
	Pin 3: Detection
	Pin 4: Not connected
Type reference of the battery charger	Off-board battery charger
Rated current of user-accessible protective fuses	There are no user-accessible fuses.

■ Antenna

Function	Frequency	Maximum output power
Bluetooth Low Energy	2402 - 2480 MHz	6 dBm

10.2. Dimensions and test results

Item	Minimum value	Maximum value
Overall length with leg rest	-	985 mm (38.8 inches)
Overall width	-	554 mm (21.8 inches)
Total mass (16-inch)	-	51.9 kg (114.4 lbs)
Total mass (18-inch)	-	52.6 kg (116.0 lbs)
Total mass (20-inch)	-	52.8 kg (116.4 lbs)
Mass of the heaviest part	-	19.4 kg (42.8 lbs)
Static stability downhill	-	15°
Static stability uphill	-	15°
Static stability sideways	-	15°
Dynamic stability uphill	-	10°
Obstacle climbing	-	50 mm (2 inches)
Maximum speed forward	-	8 km/h (5 mph) or 6 km/h (3.7 mph)*
Minimum braking distance from max speed	-	1,500 mm (59.1 inches)
Seat plane angle	-	5°
Effective seat width and depth (16-inch)	-	W400 mm (15.7 inches) x D400 mm
Effective seat width and depth (18-inch)	-	W450 mm (17.7 inches) x D450 mm
Effective seat width and depth (20-inch)	-	W500 mm (19.7 inches) x D450 mm (17.7 inches)
Seat surface height at front edge	440 mm (17.3 inches)	520 mm (20.5 inches)
Backrest hight	745 mm (29.3 inches)	945 mm (37.2 inches)
Footrest to seat distance	313 mm (12.3 inches)	393 mm (15.5 inches)
Leg to seat surface angle	-	85°
Armrest to seat distance	245 mm (9.65 inches)	305 mm (12 inches)
Front location of armrest structure	419 mm (16.5 inches)	463 mm (18.2 inches)
Horizontal location of axle	-	48 mm (1.9 inches)
Minimum turning radius	760 mm (29.9 inches)	-

The wheelchair shall conform to the following standards:

a) Requirements and test methods for static, impact and fatigue strengths (ISO 7176-8).

b) Power and control systems for electric wheelchair s - requirements and test methods (ISO 7176-14).

c) Climatic test in accordance with ISO 7176-9.

d) Requirements for resistance to ignition in accordance with ISO 7176-16.

* The speeding limit is ruled by local regulations. In the EU, 6 km/h (3.7 mph) in the UK, Germany, Austria, and the rest is specified as 8 km/h. In Asia, Hong Kong is up to 8 km. In Australia and New Zealand are up to 8 km/h. In the U.S. and Canada, it is up to 5 mph (8 km/h).

■ Declaration of Conformity for CE Marking

Hereby, WHILL, Inc. declares that WHILL Model C2 is in compliance with Directive 2014/53/EU, Directive 2011/65/EU and Regulation (EU) 2017/745. The full text of the EU declaration of conformity is available at the following internet address: https://whill.inc/

■ Disposal in the European Union



The device, battery and accessories are durable components. Improper disposal of waste products may result in the release of environmentally hazardous substances. This symbol (picture left) means that this device must be disposed of in accordance with the European Directive 2012/19/EC (WEEE Directive). To protect the environment, have the device picked up at the end of its life at a local recycling center.

Symbols

The symbols below may be found in this manual or the labels on the device.

Symbol	Meaning	Symbol	Meaning
SN	Serial number		Refer to user manual (Safety color: Blue)
UDI	Unique device identification		Refer to user manual
REF	Reference number		Refer to user manual
MD	Medical device		Maximum load capacity
EC REP	Authorized representative in the European Community		Direct current
	Manufacturer		Alternating current
	Not intended to be used as a seat in a motor vehicle (Safety color: Red)	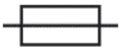	Time-lag miniature fuse-link
	No standing on the foot rest (Safety color: Red)		Class II equipment
	No access for people with active implanted cardiac devices (Safety color: Red)		For indoor use only
	Magnetic resonance unsafe (Safety color: Red)		Keep dry
	No open flame; Fire, open ignition source and smoking prohibited (Safety color: Red)		Temperature limit
	General warning sign (Safety color: Yellow)		Humidity limitation
	Warning; Magnetic field (Safety color: Yellow)		Fragile, handle with care
	Warning; Electricity (Safety color: Yellow)		This way up
	Warning; Explosive material (Safety color: Yellow)	Meaning of safety color • Red: Prohibition • Yellow: Warning • Blue: Mandatory action	

Index

A

Accessories 21
Accessory bar 19
Adjusting the maximum speed 43
Adjusting the speed 43
Adjustment procedures 65
Aircraft 91
Anti-tip bar 19, 35, 45, 93
App 94
Arm 19, 37
  Adjusting the length 66
Arm rest 19
Assembly procedures 58
  Battery 64
  Front drive base 59
  Rear drive base 59
  Seat assembly 61
  Storage basket 60
Automobile trunk 91

B

Back support 19, 53, 100
  Adjusting the angle 80
  Adjusting the height 78
Back support cushion 78
Base release handle 19, 88
Battery 19, 22, 24, 57
  Charger indicator 32
  Charging 25
  Checking the charge level 30, 43
  Installation 64
  Removal 84
Battery charging 22
Battery installation 64
Battery LED 24, 30
Battery lock release button 24, 29
Battery removal 84
Boarding 91
Brake 51
Brake release lever 19, 51

C

Charge level 30, 43
Charger 19, 24
Charger indicator 27, 30, 32
Charging procedures 25
Contact information 113
Control pad 19
  Switching the left and right sides 68

D

Dimensions 108
Disassembly procedures 83
  Battery 84
  Front drive base 88
  Rear drive base 88
  Seat assembly 85
  Storage basket 87
Display 19, 104
Disposal 100
Driving 44

E

Electromagnetic interference 10
EMI 10
Error codes 104, 105
Error displays 104

F

Foot rest 19, 38
Front drive base 57, 59, 88, 93, 100
Front wheel 19
Functions of parts 18

H

Holding the device 92

I

Information labels 20
Inspection 35, 96, 100

J

Joystick 19, 44, 46, 47, 48, 49, 99

L
Labels 16
Lap belt 41
Locking the wheelchair 54
M
Maintenance 96, 100
Manufacturing month and year 101
Moving 47
N
Names and functions of parts 18
O
Omni-wheel 19
Operating procedures 34
P
Parts replacement 100
Power button 19, 42
Pre-boarding inspection 35
R
Rear drive base 19, 57, 59, 93
Rear wheel 19
Reinstalling the joystick 99
Releasing the brake 51
Repair 100
Reporting of serious incident 16
Reuse information 101
S
Safety precautions 6
Seat assembly 56, 61, 85, 92
Adjusting the height 75
Seat cushion 62, 68
Seat post 62, 76
Seat release lever 19, 63, 85
Serial number 20, 101, 102
Smart key 20, 54
Replacing the smart key battery 97
Smartphone 94
Smartphone app 94
Sound button 19, 43
Speaker 19
Specifications 106
Speed select buttons 19, 43
Stopping 48
Storage 90
Storage basket 19, 52, 57, 60, 87, 90
Symbols 110
T
Tail light 19
Test results 106, 108
Transport 91
Troubleshooting 104
Turning 48
Turning on the power 42
W
Warning labels 2, 16

Contact information

The dealer/distributor from whom the device was purchased will handle requests for repair, maintenance and parts replacement. To determine whether a loaner device is provided during servicing, contact the dealer/distributor. Ask your dealer/distributor for details on the product warranty and give them your up-to-date contact information in case of product safety notices or product recalls.

■ Dealer/distributor

■ Manufacturer

WHILL, Inc.

2-1-11 Higashishinagawa, Shinagawa-ku, Tokyo 140-0002, Japan

■ Contact information in regions

- EU
  WHILL Europe BV
  Johan Cruijff Boulevard 65 1101 DL Amsterdam
  The Netherlands
- North America
  WHILL, Inc.
  303 Twin Dolphin Dr., 6th Floor, Redwood City,
  CA 94065
  (844) 699-4455 us.info@whill.inc
- APAC
  WHILL China CO., LTD.
  South Side, Floor 1, Building 6, No. 851,
  Chengyun Road,
  Xiangcheng District, Suzhou, Jiangsu, China
  (86)512-6856-2019

  https://whill. Inc

■ Authorized representatives and sponsors

- EU
  CMC Medical Devices
  C/ Horacio Lengo n18 C.P 29006 Málaga-Spain
- AUS
  Aidacare Pty Ltd
  Building 3A, 1 Moorebank Avenue, Moorebank,
  NSW, 2170, Australia
- CHE
  CMC Medical Devices GmbH.
  Rigistrasse 3, 6300 Zug, Switzerland
- UK
  M/s CMC Medical Devices Ltd.
  Office 32 19-21 Crawford Street, London, United Kingdom
- NZ
  CARSL Consulting
  24 Side Road, RD 10, Parkhill Farm, Hastings
  4180, New Zealand

■ App pairing ID and password

The paper slip where the App password is printed is placed in the indent of the seat. Attach it to the above square space so that you do not lose it. Ensure not to attach the slip to the device.

CE UKCA

REF 32-00022-J-04-2025-10-30