

Elevate Your Kitchen Experience with Our Exquisite Cabinet Collection

Product Catalog

ABOUT OUR BRAND

VALUE:

Cabinet Depot believes in consistently delivering high-quality products, exceptional service, and timely delivery to our dealers. We understand the importance of these factors in building strong relationships and ensuring customer satisfaction.

COMMITMENT:

With Cabinet Depot as their partner, dealers can trust that they are offering their customers the best in terms of quality, style, and affordability, while also receiving the support and reli-ability they need to succeed.

COLLABORATION:

At Cabinet Depot, we believe that a well-designed kitchen has the power to transform a house into a home. We take pride in our ability to create spaces that not only meet our clients' needs but also exceed their expectations. Our attention to detail and use of premium materials ensures that every kitchen we create is built to last, withstand the test of time, and become a cherished space for generations to come.

INNOVATION:

Cabinet Depot believes modifications on cabinets has not only brought about functionality and storage solutions, but also affordable options for unique styles. Additionally we offer semi-customization in colors to meet our clients' specific needs.

INTEGRITY:

Cabinet Depot is the manufacturer with the ability to control everything from sourcing high-quality materials to engineering and conducting thorough quality control measures throughout our production process. We excel in keep optional upgrades as a standard: soft-close hinges and glides, dovetail joints, 5 / 8" thick plywood boxes, solid birch wood face frames and Sherwin Williams Paint.

CONTENTS

Door Styles and Finishes	2
Finest Finishes	6
Cabinet Materials & Construction	7
Product Features	8
Cabinet Codes	10
Maintenance and Care	11
Cabinet Construction	12

Cabinet Specifications

Wall Cabinets	13
Base Cabinets	25
ADA Base Cabinets	35
Pantry & Wall Oven Cabinets	39
Bathroom Vanities	43
Mouldings	50
Panels & Fillers	55
Storage and Organization	59
Hoods and Specialty Cabinets	63
Decorative & Glass Doors	65
Valances, Corbels & Post	71

Additional Information

Warranty	75
CabTec Product Sku’s	76

Signature Series Cabinet

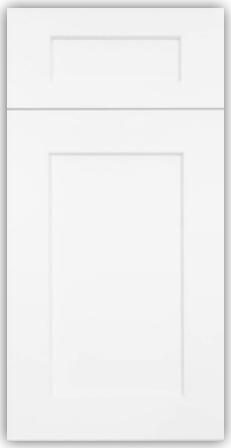

Shaker White
(SW)



Shaker Grey
(SG)



Shaker Dove
(SD)



Shaker Moss
(SM)



Shaker Naval*
(SN)

Painted Finish
(HDF) door frame (stile and rail)
(HDF) center panel
5-piece, mortise and tenon construction

Stained Finish
Birch wood door frame (stile and Rail)
(HDF) center panel with birch veneer
5-piece, mortise and tenon construction

** Shaker Naval available in limited base cabinets and vanities only*



Shaker Caramel
(SC)



Slim Shaker Dove
(SSD)



Slim Shaker Oak
(SSO)



Sturbridge White
(SBW)



Sturbridge Caramel
(SBC)

Your Color - Your Way

Cab-Tec offer customize colors with two major paint brands:



Online ordering available 24/7

Signature Series Cabinet

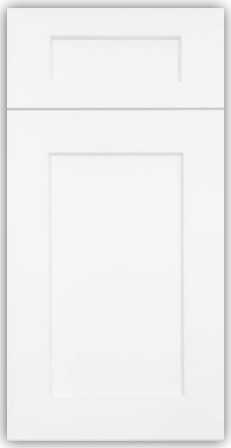

Shaker White
(SW)



Shaker Grey
(SG)



Shaker Dove
(SD)



Shaker Moss
(SM)



Shaker Naval*
(SN)

Painted Finish
(HDF) door frame (stile and rail)
(HDF) center panel
5-piece, mortise and tenon construction

Stained Finish
Birch wood door frame (stile and Rail)
(HDF) center panel with birch veneer
5-piece, mortise and tenon construction

** Shaker Naval available in limited base cabinets and vanities only*



Shaker Caramel
(SC)



Slim Shaker Dove
(SSD)



Slim Shaker Oak
(SSO)



Sturbridge White
(SBW)



Sturbridge Caramel
(SBC)





Commitment to Sustainability

It's the little things that citizens do. That's what will make the difference. Our little thing is providing a good design that is sustainable.

EPA TSCA Title VI Compliant

In efforts of constantly striving to improve the quality of our products, **Cabinet Depot** has made a commitment to ensure that all of our MDF and Plywood products are certified under Environmental Protection Agency's (EPA) Toxic Substance Contract Act (TSCA) Title VI regulations.

EPA TSCA Title VI Compliant was established to regulate the chemical emissions produced by composite wood products. This regulation reduces the exposure to formaldehyde in the air indoors.

FSC Certified

The Forest Stewardship Council (FSC), is a non-profit organization that ensures that forestry is practiced in an environmentally responsible manner.

Cabinet Depot is committed to supporting sustainable products and doing our part in contributing to the environment.

Finest Finishes

We believe in selecting the finest raw materials, ensuring consistent quality and uniformity of appearance.

At **CabTec**, when it comes to our cabinet finishes, we pride ourselves by using the best technology and workmanship to ensure high quality cabinetry. Our finishes consist of stained and painted options in various colors and styles.

Our Staining Process

Our stained cabinet doors and face frames are made using the finest quality solid birch wood.

We begin by using a combination of automatic sanding machines and hand detailing to ensure a smooth finish.

Application of equalizers and toners are used to balance the color of the wood and ensure a uniform color throughout.

Automatic spraying machines ensures the stain is embedded deep into the cabinet, which highlights the natural wood grain.

All stained surfaces are then hand-rubbed and wiped down to remove excess stain. Then left to air dry.

Once the stain has dried, a wood sealer is applied to provide even protection.

We then sand the surfaces to provide a smooth and consistent finish.

Our final protective coat is applied to maximize resistance to scuffing, moisture, fading and most household chemicals.

The cabinets are then placed through a color consistency examination where additional touch-ups are made where needed.

Our Painting Process

Our painted cabinets doors are made with high desity fiberboard (HDF)- painted faceframes are made with
the finest quality solid birch wood.

We begin by using using a combination of automatic sanding machines and hand detailing to ensure a smooth finish.

Clear primer is applied and an automatic sanding machine is used to ensure an even and smooth surface.

The first base coat is the applied and then dried using a
specialized drying machine.

The base coat is then sanded and vaccummed to remove
any excess dust.

We then apply our second base coat and then dried using a specialized drying machine.

We then sand the surfaces until smooth and consistent.

Our final top coat is applied to maximize resistance to scuffing, moisture, fading and most household chemicals.

The cabinets are then inspected and additional touch-ups
are made where needed.

Cabinet Materials & Construction



Universal Wall Cabinet

CABINET BOX
- 5/8” thick plywood with natural finish wood veneer on both sides.
- Metal corner brackets for increased strength.

STAINED DOOR & FACE FRAME
- 3/4” thick solid birch door and face frame.
- MDF center insert with birch wood veneer.
- Full overlay door.

PAINTED DOOR & FACE FRAME
- 3/4 thick Engineered HDF Door Frame.
- 3/4” thick solid birch face frame.
- MDF center insert.
- Full overlay door.



Universal Base Cabinet

DRAWERS
- 5/8” thick, finger jointed solid birch wood.
- Dovetail construction.

ADJUSTABLE SHELF
- 3/4” thick plywood with natural finish wood veneer on all sides.
- Adjustable metal clips.

Product Features

DOOR HINGES

SIX WAY ADJUSTABLE, SOFT CLOSED, EURO STYLE CONCEALED HINGES

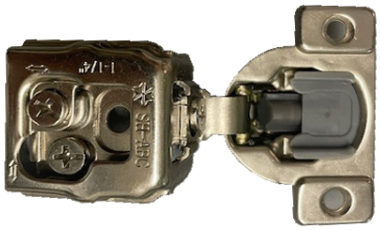



DRAWER GLIDES

SIX WAY ADJUSTABLE- UNDER-MOUNT, FULL-EXTENSION SOFT CLOSE GLIDES FOR MAXIMUM ACCESS.

METAL CORNER BRACKETS

STRENGTHEN THE CORNER OF OUR UPPER & BASE CABINETS FOR MAXIMUM STABILITY.





DRAWERS

EASY TO ASSEMBLE, DOVETAILED CONSTRUCTION FOR SUPERIOR STRENGTH.

SINK TIP OUTS

STANDARD ON ALL OUR SINK BASES. HIDE WASH CLOTHES, SPONGES AND CLEANING TOOLS TO KEEP YOUR SINK AREA CLEAN AND CLEAR.



Cabinet Depot believes in transparency. Our cabinets are manufactured
under fully inspection of our owned quality control team step by step from sorting raw materials to inspecting the door finish piece by piece and making it possible to ensure the best quality possible!

We use a combination of the latest technology and hands-on approaches to ensure good quality cabinets to our clients.

Our cabinets are all constructed with EPA TSCA Title VI Compliant birch Plywood and High Quality High-Density Fiberboard.

Our cabinets are constructed with best quality wood materials and built to last.

Where functionality, quality and affordability meet.

Our cabinets come in standard cabinet sizes, growing in increments of 3”.

All of our base cabinets are 24” in depth and are 34 1/2” in height.
Our upper cabinets are all 12” in depth and come
in three standard cabinet heights—30”, 36” and 42”.

We have a wide variety of products from pantries, wine racks, open shelving units, stackable cabinets, glass cabinets, trims, corbels, posts, etc.

Our cabinets can be easily modified which makes them semi-customizable cabinets. This will give you the opportunity to fulfill any of your clients requests.

Cabinet Codes

Cabinet codes use a letter and number system to represent style, cabinet type, size and options. See below for specific cabinet code examples by cabinet type.

Base Cabinet Code Example:
SW-DB36
Shaker White- Drawer Base, 36”W.
All Base cabinets are 24”D x 34.5”H

Wall Cabinet Code Example:
SW-W3036
Shaker White- Wall Cabinet, 30”W x 36”H
All wall cabinets are 12”D.

Wall Pantry Cabinet Code Example:
SW-WP1884
Shaker White – Wall Pantry,
18’’W x 84’’H
All wall pantry cabinets are 24”D.

Refrigerator Wall Cabinet Code Example:
SW-W301824
Shaker White - Refrigerator Wall Cabinet,
30”W x 18”H x 24”D
All refrigerator wall cabinets are 24”D.

Microwave Wall Pantry Code Example:
SW-MWP279024
Shaker White- Microwave Wall Pantry, 27”W x 90”H x 24”D
All microwave wall pantry cabinets are 24”D.

Bathroom Vanity Code Example:
SW-VDB1521-3
Shaker White- Vanity Drawer Base, 15”W- 3x Drawers
All bathroom vanity cabinets are 34.5”H x 21”D.

Cabinet Code Glossary

Base Cabinets:
B- Base Cabinet
DB- Drawer Base
SB- Sink Base
LS- Lazy Susan
BBC- Blind Corner Base
CSB- Corner Sink Base
MDB- Microwave Drawer Base
TB- Tray Base
SP- Spice Pull
BEC- Base End Cabinet
FSB-Farm Sink Base
FH-Full Height Door
BW- Waste Bin
BER- Easy Reach Cabinet

Wall Cabinets:
W- Wall Cabinet
WDC- Wall Diagonal Corner
WBL- Wall Blind Corner
WMC- Wall Microwave Cabinet
WEC- Wall End Cabinet
WLS- Wall Easy Reach

Bathroom Vanities:
V- Vanity Base Cabinet
VDB- Vanity Drawer Base
VSD- Vanity Sink Combo Base
VCD - Vanity Sink Combo Double
VB- Vanity Base
DV- Vanity Tower

Pantry & Oven Cabinets:
WP- Wall PantryCabinet
MWP- Microwave Wall Pantry
OC- Oven Cabinet

Storage & Organization:
RD- Roll Out Tray
PNL- Finished Plywood Shelf
FD- File Drawer Cabinet
WRES- Wine Rack Euro Style
WR- Wine Rack
KD- Knee Drawer

Hoods & Specialty Cabinets:
RHA-Decorative Wood Hood
NRH- Chimney Style Wood Hood

Decorative Panels & Glass Doors
DDW- Decorative Door Wall
DDB- Decorative Door Base
TDD- Top Pantry Decorative Door
BDD- Base Pantry Decorative Door
GD- Glass Door

Panels & Fillers
DWR- Dishwasher Return Panel
REP- Refrigerator End Panel
BP- Finished Skin Panel
FB- Finished Plywood
BEPL- Base End Panel Left
BEPR- Base End Panel Right
WEP- Wall End Panel
WF- Wall Filler
BSV- Base Skin Panel
WSV- Wall Skin Panel

Mouldings:
CLR-Contemporary Light Rail
CM- Crown Moulding
CRM- Chair Rail Moulding
TLR- Decorative Light Rail
OCM- Outside Corner Moulding
SM- Scribe Moulding
BBM- Base Board Moulding
TK- Toe Kick

Valances, Corbels & Post
VAL- Curved Valance
CB- Decorative Corbels
SSP-Shaker Style Post
SP- Classic Post

Maintenance and Care

General Information:

- Keep all cabinet surfaces dry at all times.
- Cabinetry surfaces should be dried immediately with a soft, microfiber cloth after cleaning.
- As with all solid wood products; drastic changes in temperature or humitity can be harmful to the cabinet finishes and over-all structure.

Basic Cleaning:

- After installation wipe the interior and exterior of the cabinets with a soft damp cloth and dry immediately with another clean, soft cloth.
- For routine cleaning; use a soft, clean cloth dampened with warm water—If the water alone does not clean cabinets completely, mix a mild dishwasher soap with the water.
- Wipe up food spills and water spots promptly with a damp cloth or sponge and dry the surface immediately.
- For best results—use a blotting motion rather than a wiping motion to remove the substance.

Cleaning of Glass Door Inserts:

- Use an ammonia-free glass cleaner with a soft, clean microfiber cloth.
- Spray a glass cleaner on a clean microfiber cloth or paper towel.
- Avoid spraying the glass cleaner directly on the glass—this is to prevent glass cleaner running into the joints of the cabinets.

Basic Care & Things to Avoid:

- These products and ingredients can damage the cabinetry. Please avoid use of the following:
- Scouring Pads
- Steel Wool
- Ammonia
- Nail Polish Remover
- Paint Thinners
- Bleach
- Never leave a cloth saturated with cleaner or water on any cabinet surfaces.
- Avoid using an excessively damp cloth over exterior and interior of cabinetry.
- When using small kitchen appliances that produce heat and/or steam always pull them away from the underside of cabinetry to prevent damage to the cabinets.
- Always remember to turn on the ventilation while cooking.

Cabinet Construction

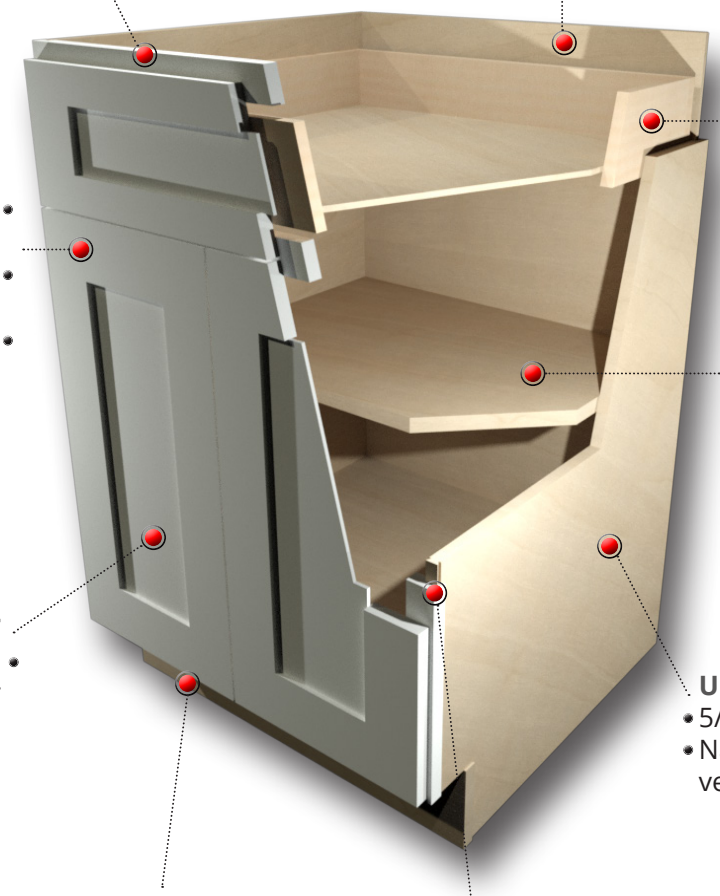

BACK PANEL
- 5/8" Birch plywood
- Natural finish wood veneer both sides
- Full height

FACE FRAMES
3/4" Solid birch wood

DRAWERS
- 5/8" Finger jointed solid birch wood
- Dovetail construction
- Soft close glides

DOORS & DRAWER FRONT
3/4" Solid birch wood
- Stained

3/4" High density fiberboard
- Painted

Soft close hinges

ADJUSTABLE SHELF
- 3/4" Birch plywood
- Natural finish wood veneer all sides
- Metal Clips

CENTER INSERT
Painted MDF or MDF with stained birch wood veneer

UNIVERSAL CABINET BOX
- 5/8" Birch plywood
- Natural finish wood veneer both sides

TOE KICK
5/8" Birch plywood
Natural finish wood veneer

FRENCH DOVETAIL ASSEMBLY
- Side panel to face frame connection



WALL CABINETS

Wall Cabinets

Wall Cabinets - Single Door - 12"H

Cabinet Code	Dimensions	Glass Door Option
W1212	12"W x 12"H x 12"D	W1212GD
W1512	15"W x 12"H x 12"D	W1512GD
W1812	18"W x 12"H x 12"D	W1812GD
W2112	21"W x 12"H x 12"D	W2112GD

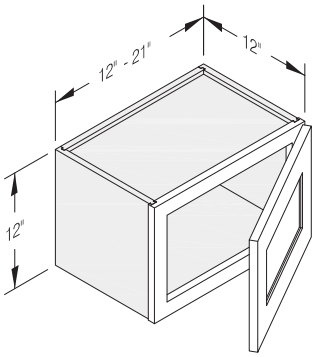

Includes:
- One (1) universal cabinet box.
- One (1) face frame.
- One (1) door with soft close hinges.
- Metal brackets, screws and required hardware.

NOTE: Use WSV panel to skin exterior sides or modified wall end panel if exposed. See page 58 for panels. No shelf in 12"H cabinets.

Wall Cabinets - Double Door - 12"H

Cabinet Code	Dimensions	Glass Door Option
W2412	24"W x 12"H x 12"D	(2x) W2412GD
W2712	27"W x 12"H x 12"D	(2x) W2712GD
W3012	30"W x 12"H x 12"D	(2x) W3012GD
W3312	33"W x 12"H x 12"D	(2x) W3312GD
W3612	36"W x 12"H x 12"D	(2x) W3612GD

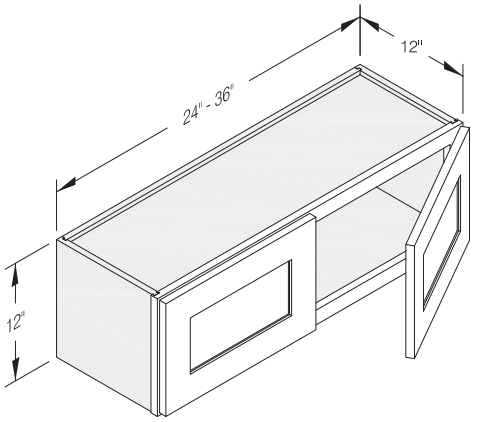

Includes:
- One (1) universal cabinet box.
- One (1) face frame.
- Two (2) doors with soft close hinges.
- Metal brackets, screws and required hardware.

NOTE: Use WSV panel to skin exterior sides or modified wall end panel if exposed. See page 58 for panels. No shelf in 12"H cabinets.

Wall Cabinets

Wall Cabinets - Double Door - 15" & 18"H

Cabinet Code	Dimensions
W3015	30"W x 15"H x 12"D
W3315	33"W x 15"H x 12"D
W3615	36"W x 15"H x 12"D
W3018	30"W x 18"H x 12"D
W3318	33"W x 18"H x 12"D
W3618	36"W x 18"H x 12"D

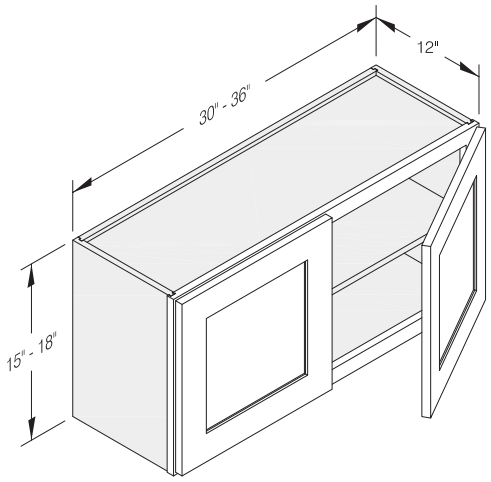

Includes:
- One (1) universal cabinet box.
- One (1) face frame.
- Two (2) doors with soft close hinges.
- One (1) adjustable shelf with metal clips.
- No Shelf in 15"H.
- Metal brackets, screws and required hardware.

NOTE: Use WSV panel to skin exterior sides or modified wall end panel if exposed. See page 58 for panels.

Wall Cabinets - Double Door - 21" & 24"H

Cabinet Code	Dimensions
W3021	30"W x 21"H x 12"D
W3321	33"W x 21"H x 12"D
W3621	36"W x 21"H x 12"D
W2424	24"W x 24"H x 12"D
W3024	30"W x 24"H x 12"D
W3324	33"W x 24"H x 12"D
W3624	36"W x 24"H x 12"D

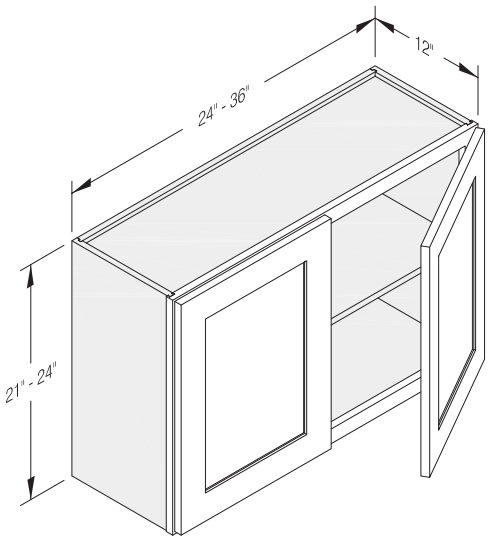

Includes:
- One (1) universal cabinet box.
- One (1) face frame.
- Two (2) doors with soft close hinges.
- One (1) adjustable shelf with metal clips.
- Metal brackets, screws and required hardware.

NOTE: Use WSV panel to skin exterior sides or modified wall end panel if exposed. See page 58 for panels.

Wall Cabinets

Wall Cabinets - Single Door - 30”H

Cabinet Code	Dimensions	Glass Door Option
W0930	9”W x 30”H x 12”D	N/A
W1230	12”W x 30”H x 12”D	W1230GD
W1530	15”W x 30”H x 12”D	W1530GD
W1830	18”W x 30”H x 12”D	W1830GD
W2130	21”W x 30”H x 12”D	W2130GD

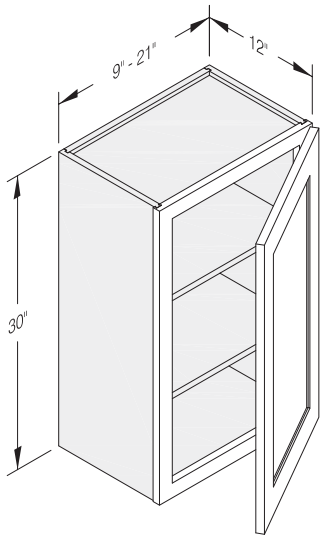

Includes:
- One (1) universal cabinet box.
- One (1) face frame.
- One (1) door with soft close hinges.
- Two (2) adjustable shelves with metal clips.
- Metal brackets, screws and required hardware.

NOTE: Use WEP30 panel to replace exterior sides if exposed. See page 57 for replacement wall end panels. Glass door option not included. Must be ordered separate. See pages 69-70 for glass doors.

Wall Cabinets - Double Door - 30”H

Cabinet Code	Dimensions	Glass Door Option
W2430	24”W x 30”H x 12”D	(2x) W2430GD
W2730	27”W x 30”H x 12”D	(2x) W2730GD
W3030	30”W x 30”H x 12”D	(2x) W3030GD
W3330	33”W x 30”H x 12”D	(2x) W3330GD
W3630	36”W x 30”H x 12”D	(2x) W3630GD
W4230	42”W x 30”H x 12”D	(2x) W2130GD

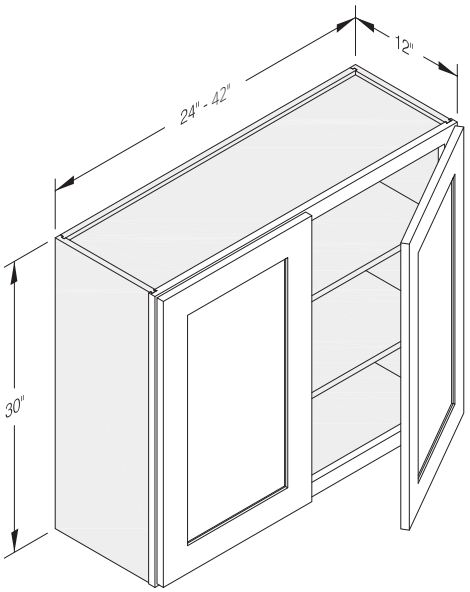

Includes:
- One (1) universal cabinet box.
- One (1) face frame.
- Two (2) doors with soft close hinges.
- Two (2) adjustable shelves with metal clips.
- Metal brackets, screws and required hardware.

NOTE: Use WEP30 panel to replace exterior sides if exposed. See page 57 for replacement wall end panels. Glass door option not included. Must be ordered separate. See pages 69-70 for glass doors.

Wall Cabinets

Wall Cabinets - Single Door - 36"H

Cabinet Code	Dimensions	Glass Door Option
W0936	9"W x 36"H x 12"D	N/A
W1236	12"W x 36"H x 12"D	W1236GD
W1536	15"W x 36"H x 12"D	W1536GD
W1836	18"W x 36"H x 12"D	W1836GD
W2136	21"W x 36"H x 12"D	W2136GD

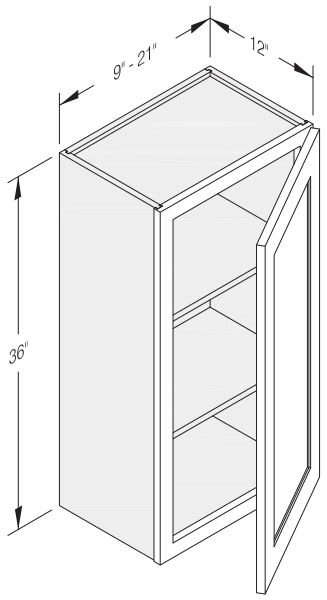

Includes:
- One (1) universal cabinet box.
- One (1) face frame.
- One (1) door with soft close hinges.
- Two (2) adjustable shelves with metal clips.
- Metal brackets, screws and required hardware.

NOTE: Use WEP36 panel to replace exterior sides if exposed. See page 57 for replacement wall end panels. Glass door option not included. Must be ordered separate. See pages 69-70 for glass doors.

Wall Cabinets - Double Door - 36"H

Cabinet Code	Dimensions	Glass Door Option
W2436	24"W x 36"H x 12"D	(2x) W2436GD
W2736	27"W x 36"H x 12"D	(2x) W2736GD
W3036	30"W x 36"H x 12"D	(2x) W3036GD
W3336	33"W x 36"H x 12"D	(2x) W3336GD
W3636	36"W x 36"H x 12"D	(2x) W3636GD
W4236	42"W x 36"H x 12"D	(2x) W2136GD

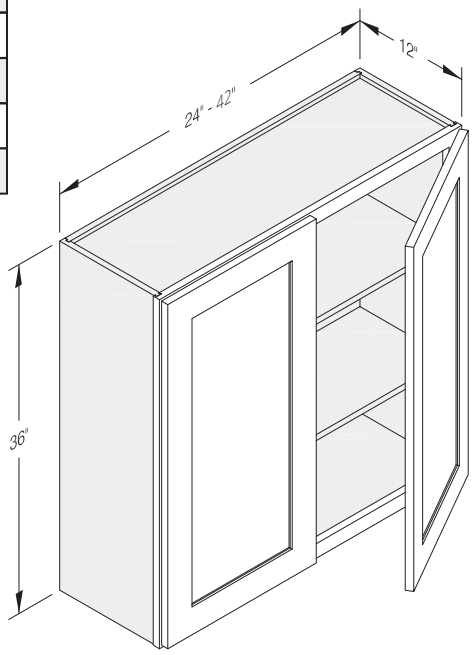

Includes:
- One (1) universal cabinet box.
- One (1) face frame.
- Two (2) doors with soft close hinges.
- Two (2) adjustable shelves with metal clips.
- Metal brackets, screws and required hardware.

NOTE: Use WEP36 panel to replace exterior sides if exposed. See page 57 for replacement wall end panels. Glass door option not included. Must be ordered separate. See pages 69-70 for glass doors.

Wall Cabinets

Wall Cabinets - Single Door - 42"H

Cabinet Code	Dimensions	Glass Door Option
W0942	9"W x 42"H x 12"D	N/A
W1242	12"W x 42"H x 12"D	W1242GD
W1542	15"W x 42"H x 12"D	W1542GD
W1842	18"W x 42"H x 12"D	W1842GD
W2142	21"W x 42"H x 12"D	W2142GD

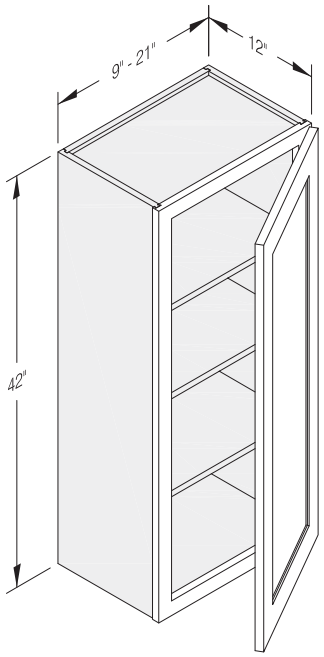

Includes:
- One (1) universal cabinet box.
- One (1) face frame.
- One (1) door with soft close hinges.
- Three (3) adjustable shelves with metal clips.
- Metal brackets, screws and required hardware.

NOTE: Use WEP42 panel to replace exterior sides if exposed. See page 57 for replacement wall end panels. Glass door option not included. Must be ordered separate. See pages 69-70 for glass doors.

Wall Cabinets - Double Door - 42"H

Cabinet Code	Dimensions	Glass Door Option
W2442	24"W x 42"H x 12"D	(2x) W2442GD
W2742	27"W x 42"H x 12"D	(2x) W2742GD
W3042	30"W x 42"H x 12"D	(2x) W3042GD
W3342	33"W x 42"H x 12"D	(2x) W3342GD
W3642	36"W x 42"H x 12"D	(2x) W3642GD
W4242	42"W x 42"H x 12"D	(2x) W2142GD

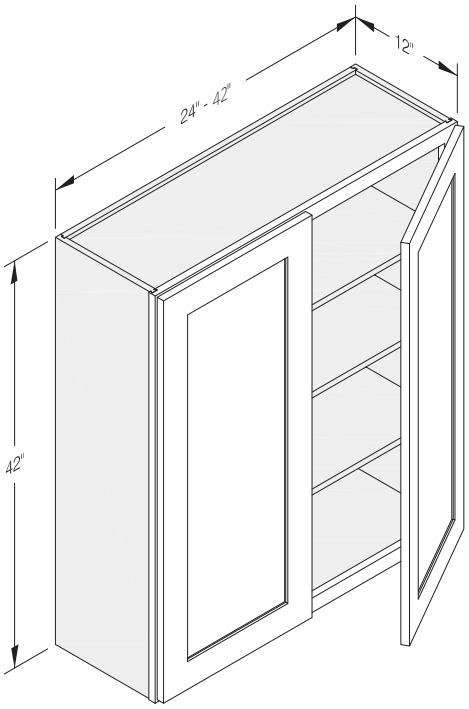

Includes:
- One (1) universal cabinet box.
- One (1) face frame.
- Two (2) doors with soft close hinges.
- Three (3) adjustable shelves with metal clips.
- Metal brackets, screws and required hardware.

NOTE: Use WEP42 panel to replace exterior sides if exposed. See page 57 for replacement wall end panels. Glass door option not included. Must be ordered separate. See pages 69-70 for glass doors.

Wall Cabinets

Refrigerator Wall Cabinets - 12" & 15"H

Cabinet Code	Dimensions	Glass Door Option
W301224	30"W x 12"H x 24"D	(2x) W3012GD
W301524	30"W x 15"H x 24"D	N/A
W331224	33"W x 12"H x 24"D	(2x) W3312GD
W331524	33"W x 15"H x 24"D	N/A
W361224	36"W x 12"H x 24"D	(2x) W3612GD
W361524	36"W x 15"H x 24"D	N/A

Includes:
- One (1) universal cabinet box.
- One (1) face frame.
- Two (2) doors with soft close hinges.
- Metal brackets, screws and required hardware.

NOTE: Use BSV panel to skin exterior sides or modified wall end panel if exposed. See page 58 for panels. Glass door option not included. Must be ordered separate. See pages 69-70 for glass doors.

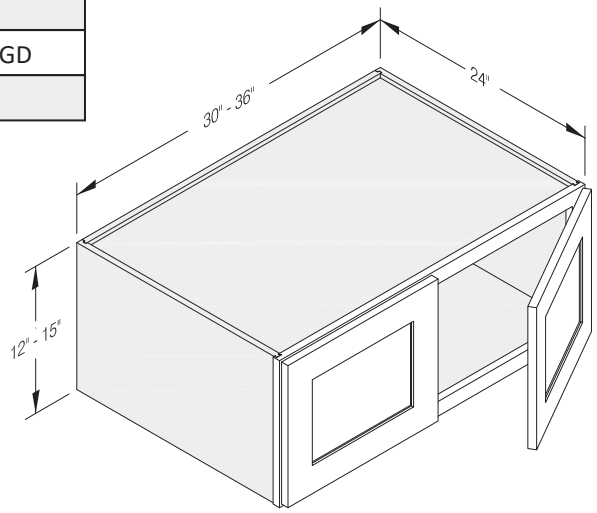

Refrigerator Wall Cabinets - 18" & 21"H

Cabinet Code	Dimensions
W301824	30"W x 18"H x 24"D
W331824	33"W x 18"H x 24"D
W361824	36"W x 18"H x 24"D

Includes:
- One (1) universal cabinet box.
- One (1) face frame.
- Two (2) doors with soft close hinges.
- One (1) adjustable shelf with metal clips.
- Metal brackets, screws and required hardware.

NOTE: Use BSV panel to skin exterior sides or modified wall end panel if exposed. See page 58 for panels.

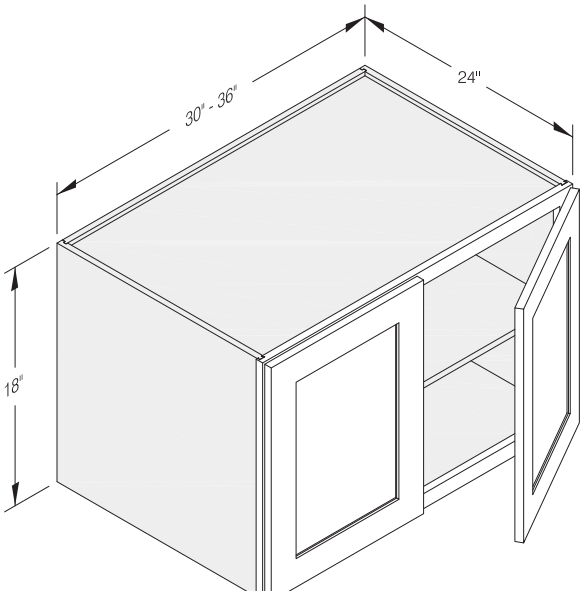

Wall Cabinets

Refrigerator Wall Cabinets - 24”H

Cabinet Code	Dimensions
W302424	30”W x 24”H x 24”D
W332424	33”W x 24”H x 24”D
W362424	36”W x 24”H x 24”D

Includes:
- One (1) universal cabinet box.
- One (1) face frame.
- Two (2) doors with soft close hinges.
- One (1) adjustable shelf with metal clips.
- Metal brackets, screws and required hardware.

NOTE: Use BSV panel to skin exterior sides or modified wall end panel if exposed. See page 58 for panels.

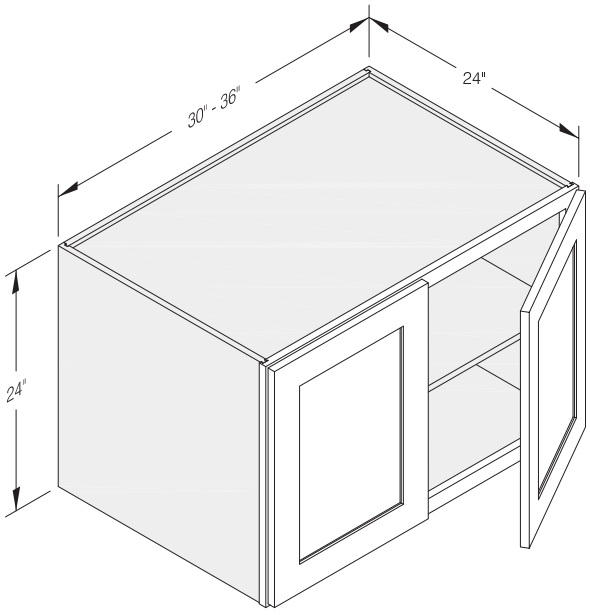

Wall Diagonal Corner Cabinets - 24”W

Cabinet Code	Dimensions	Glass Door Option
WDC2412	24”W x 12”H x 12”D	WDC2412GD
WDC2430	24”W x 30”H x 12”D	WDC2430GD
WDC2436	24”W x 36”H x 12”D	WDC2436GD
WDC2442	24”W x 42”H x 12”D	WDC2442GD

Includes:
- One (1) cabinet box exterior to match door color.
- One (1) face frame.
- One (1) door with soft close hinges.
- Two (2) adjustable shelves with metal clips in 30” & 36”H.
- Three (3) adjustable shelves with metal clips in 42”H.
- Metal corner brackets, screws and required hardware.

NOTE: Wall Diagonal Corner cabinets have exterior finished to match door color. No shelf in 12“ H wall diagonal cabinets.

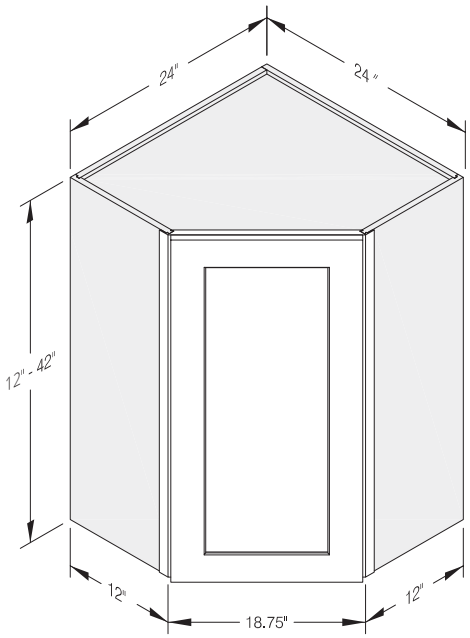

Wall Blind Corner Cabinets - (L / R)

Cabinet Code	Dimensions
WBL2730	27”W x 30”H x 12”D
WBL2736	27”W x 36”H x 12”D
WBL2742	27”W x 42”H x 12”D

Includes:
- One (1) cabinet box.
- One (1) face frame.
- One (1) door with soft close hinges.
- Two (2) adjustable shelves with metal clips in 30” & 36”H.
- Three (3) adjustable shelves with metal clips in 42”H.
- Metal brackets, screws and required hardware.

NOTE: Use WEP30, WEP36 or WEP42 panel to replace exterior sides if exposed. See page 57 for replacement wall end panels.

Wall blind corner cabinets DO NOT need to be pulled out from wall to create clearance.

1½”W perpendicular filler required before adjacent cabinet to create clearance for door swing.

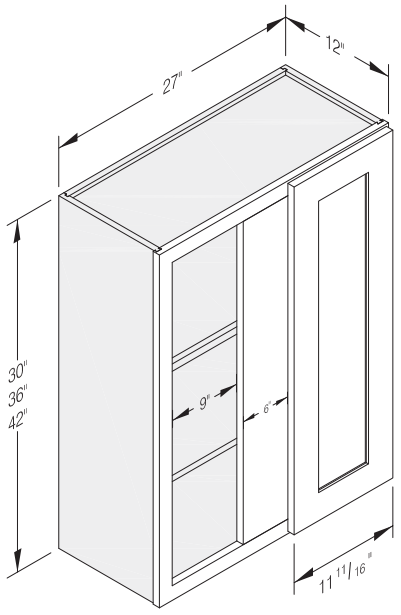

Center Stile = 6” Wide
Opening = 9” Wide, (both sides)

Easy Reach Corner Cabinets

Cabinet Code	Dimensions	Glass Door Option
WLS2430	24”W x 30”H x 12”D	(2X) WLS2430GD
WLS2436	24”W x 36”H x 12”D	(2X) WLS2436GD
WLS2442	24”W x 42”H x 12”D	(2X) WLS2442GD

Includes:
- One (1) universal cabinet box.
- One (1) face frame.
- Two (2) doors with soft close hinges.
- One (1) adjustable shelf with metal clips.
- Metal brackets, screws and required hardware.

NOTE: Use WEP30, WEP36 or WEP42 panel to replace exterior sides if exposed. See page 57 for replacement wall end panels.

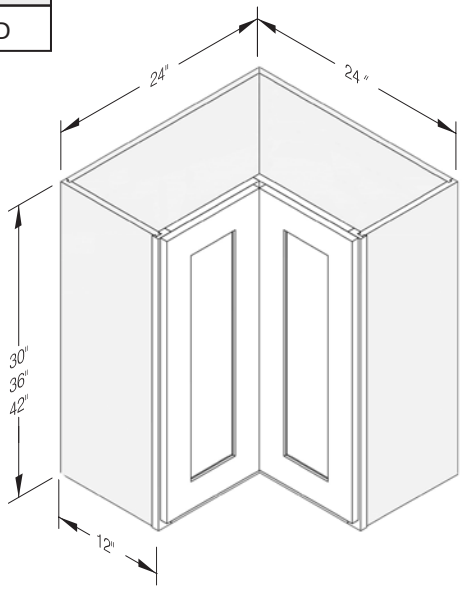

Wall Cabinets

Wall Microwave Cabinets

Cabinet Code	Dimensions
WMC2730	27''W x 30''H x 12''D
WMC2736	27''W x 36''H x 12''D

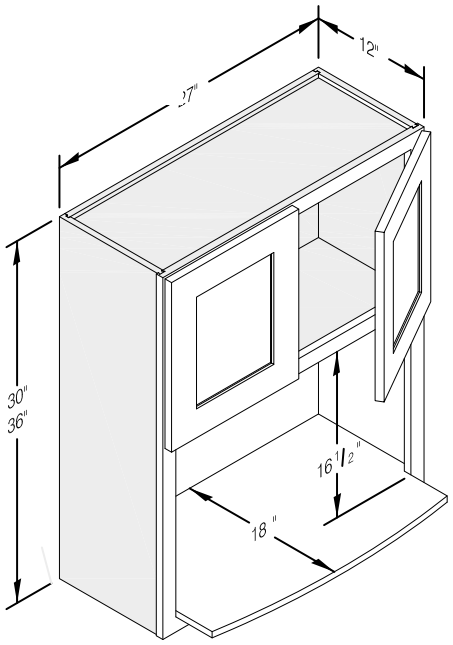

Includes:
- One (1) cabinet box, Interior to match door style.
- One (1) face frame.
- Two (2) doors with soft close hinges.
- One (1) fixed shelf with metal clips, shelf to match door style.
- Metal corner brackets, screws and required hardware.

NOTE: Microwave wall cabinets have finished exteriors and interiors to match door style.

Wall End Cabinets

Cabinet Code	Dimensions	Glass Door Option
WEC1230	12”W x 30”H x 12”D	WEC1230GD
WEC1236	12”W x 36”H x 12”D	WEC1236GD
WEC1242	12”W x 42”H x 12”D	WEC1242GD

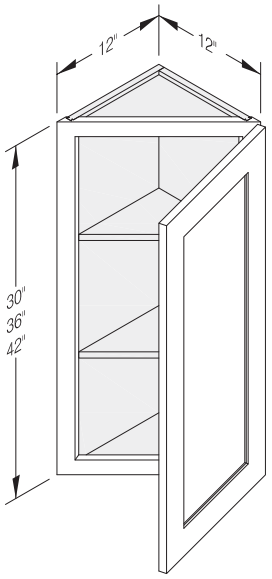

Includes:
- One (1) universal cabinet box.
- One (1) face frame.
- One (1) door with soft close hinges.
- Two (2) adjustable shelves with metal clips in 30” & 36”H.
- Three (3) adjustable shelves with metal clips in 42”H.
- Metal brackets, screws and required hardware.

Wall Open Cabinet

Cabinet Code	Dimensions
WOC3018	30”W x 18”H x 12”D

Includes:
- One (1) universal cabinet box.
- One (1) face frame.
- Metal brackets, screws and required hardware.

NOTE: Use WSV panel to skin exterior sides or modified wall end panel if exposed. See page 58 for panels. Finished Interiors to match door color.

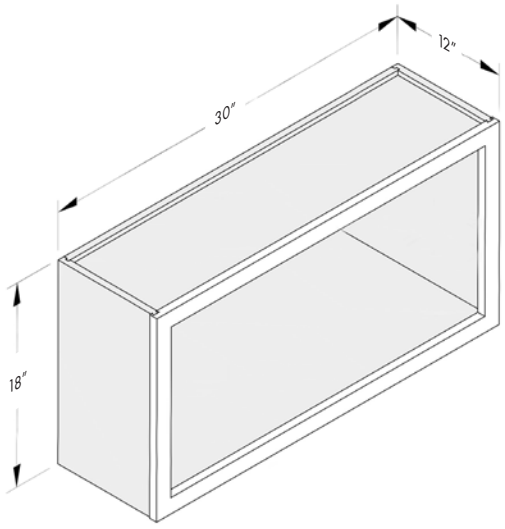

Microwave Shelf For Wall Open Cabinet

Cabinet Code	Dimensions
WMSF30	28 5/16”W x ¾”H x 18”D

Includes:
- One (1) Microwave Shelf for WOC3018

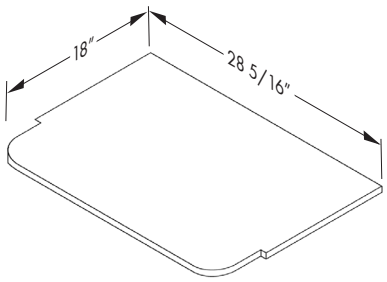

X-Shelf For Wall Open Cabinet

Cabinet Code	Dimensions
WXSF30	28 ⅜”W x 15 ⅜”H x 12”D

Includes:

- One (1) X-Shelf for WOC3018

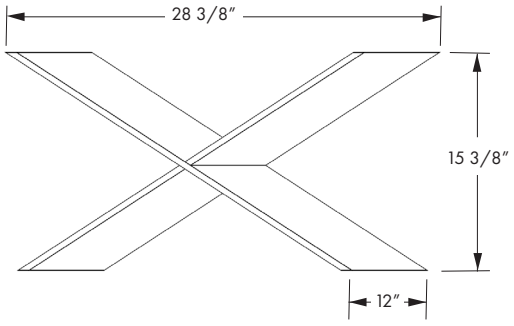



BASE CABINETS

Base Cabinets

Tray Base Cabinet

Cabinet Code	Dimensions
TB09	9”W x 34 ½”H x 24”D

Includes:
- One (1) universal cabinet box.
- One (1) face frame.
- One (1) door with soft close hinges.
- One (1) adjustable shelf with metal clips.
- Metal brackets, screws and required hardware.

NOTE: Use BEPL (Left) or BEPR (Right) panels to replace exterior sides if exposed. See page 57 for replacement base end panels.

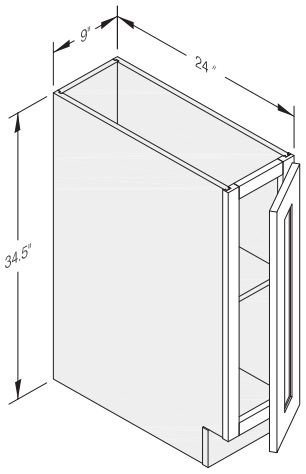

Base Cabinets - Full Height Door, 1 Door

Cabinet Code	Dimensions
B12FH	12”W x 34 ½”H x 24”D
B15FH	15”W x 34 ½”H x 24”D
B18FH	18”W x 34 ½”H x 24”D
B21FH	21”W x 34 ½”H x 24”D

Includes:
- One (1) universal cabinet box.
- One (1) face frame.
- One (1) door with soft close hinges.
- One (1) adjustable shelf with metal clips.
- Metal brackets, screws and required hardware.

NOTE: Use BEPL (Left) or BEPR (Right) panels to replace exterior sides if exposed. See page 57 for replacement base end panels.

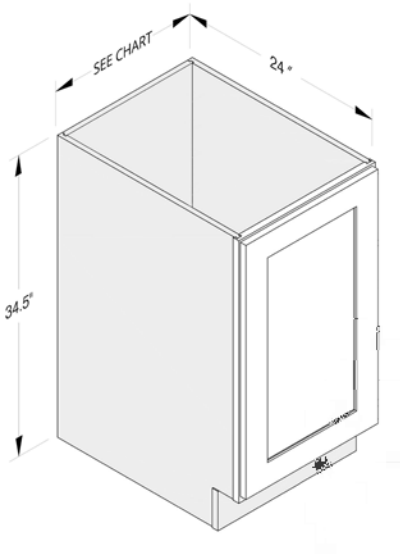

Base Cabinets - Full Height Door, 2

Cabinet Code	Dimensions
B24FH	24”W x 34 ½”H x 24”D
B30FH	30”W x 34 ½”H x 24”D
B33FH	33”W x 34 ½”H x 24”D
B36FH	36”W x 34 ½”H x 24”D
B42FH	42”W x 34 ½”H x 24”D

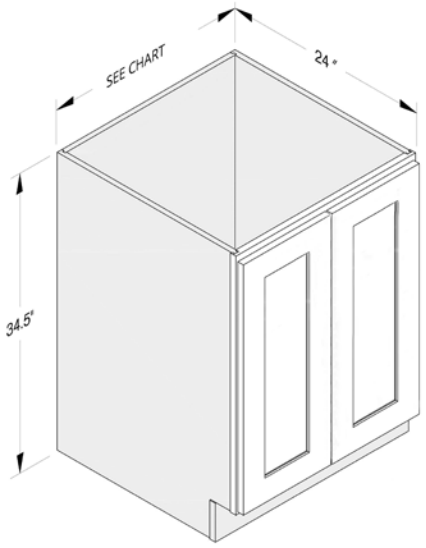

Includes:
- One (1) universal cabinet box.
- One (1) face frame.
- Two (2) doors with soft close hinges.
- One (1) adjustable shelf with metal clips.
- Metal brackets, screws and required hardware.

NOTE: Use BEPL (Left) or BEPR (Right) panels to replace exterior sides if exposed. See page 57 for replacement base end panels.

Base Cabinets - 1 Drawer & 1 Door

Cabinet Code	Dimensions
B12	12”W x 34 ½”H x 24”D
B15	15”W x 34 ½”H x 24”D
B18	18”W x 34 ½”H x 24”D
B21	21”W x 34 ½”H x 24”D

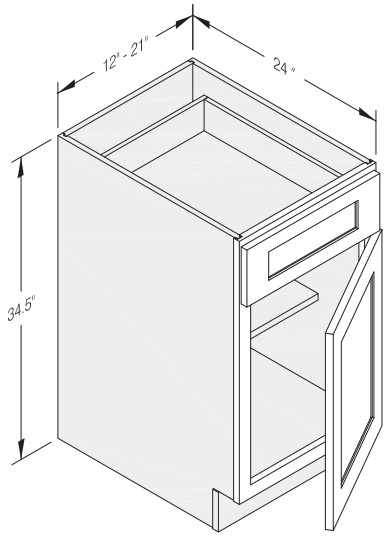

Includes:
- One (1) universal cabinet box.
- One (1) face frame.
- One (1) drawer with soft close glides.
- One (1) door with soft close hinges.
- One (1) adjustable shelf with metal clips.
- Metal brackets, screws and required hardware.

NOTE: Use BEPL (Left) or BEPR (Right) panels to replace exterior sides if exposed. See page 57 for replacement base end panels.

Drawer Interior 3-1/4”H x 19-5/8”D

Base Cabinets - 1 Drawer & 1 Door With Waste Bin

Cabinet Code	Dimensions
BWB15	15”W x 34 ½”H x 24”D
BWB18	18”W x 34 ½”H x 24”D
BWB21	21”W x 34 ½”H x 24”D

Includes:
- One (1) universal cabinet box.
- One (1) face frame.
- One (1) drawer with soft close glides.
- One (1) door with soft close hinges.
- One (1) waste bin. (BWB15)
- Two (2) waste bins. (BWB18 & BWB21)
- Metal brackets, screws and required hardware.

NOTE: Use BEPL (Left) or BEPR (Right) panels to replace exterior sides if exposed. See page 57 for replacement base end panels.

Drawer Interior 3-1/4”H x 19-5/8”D

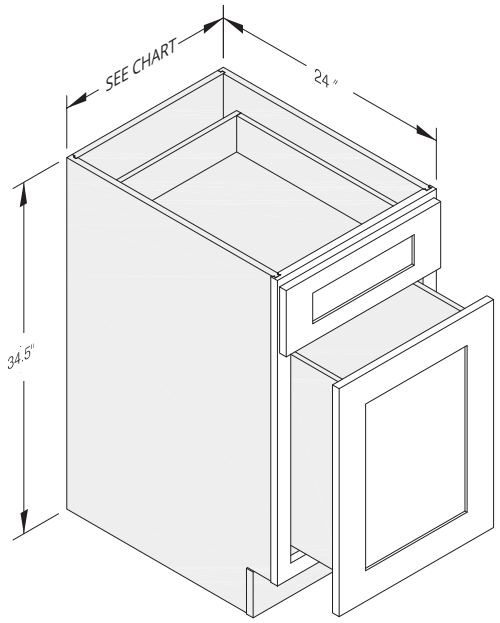

Base Cabinets - 1 Drawer & 2 Doors

Cabinet Code	Dimensions
B24	24”W x 34 ½”H x 24”D
B27	27”W x 34 ½”H x 24”D

Includes:
- One (1) universal cabinet box.
- One (1) face frame.
- One (1) drawer with soft close glides.
- Two (2) doors with soft close hinges.
- One (1) adjustable shelf with metal clips.
- Metal brackets, screws and required hardware.

NOTE: Use BEPL (Left) or BEPR (Right) panels to replace exterior sides if exposed. See page 57 for replacement base end panels.

Drawer Interior 3-1/4”H x 19-5/8”D

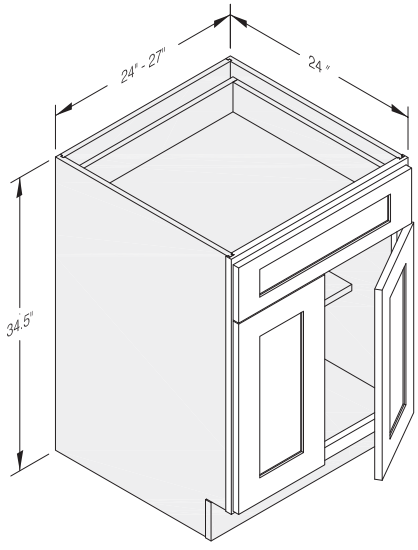

Base Cabinets

Base Cabinets - 2 Drawers & 2 Doors

Cabinet Code	Dimensions
B30	30”W x 34 ½”H x 24”D
B33	33”W x 34 ½”H x 24”D
B36	36”W x 34 ½”H x 24”D
B39	39”W x 34 ½”H x 24”D
B42	42”W x 34 ½”H x 24”D

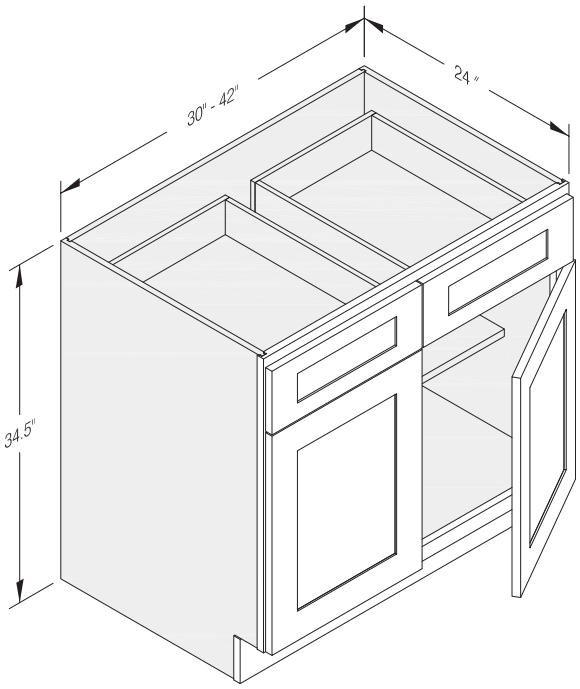

Includes:
- One (1) universal cabinet box.
- One (1) face frame.
- Two (2) drawers with soft close glides.
- Two (2) doors with soft close hinges.
- One (1) adjustable shelf with metal clips.
- Metal brackets, screws and required hardware.

NOTE: Use BEPL (Left) or BEPR (Right) panels to replace exterior sides if exposed. See page 57 for replacement base end panels.

Drawer Interior 3-1/4”H x 19-5/8”D

Drawer Base - 2 Drawers

Cabinet Code	Dimensions
2DB24	24”W x 34 ½”H x 24”D
2DB30	30”W x 34 ½”H x 24”D

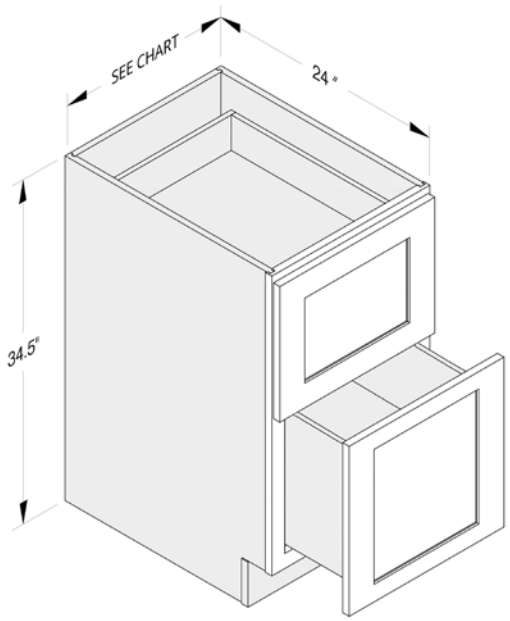

Includes:
- One (1) universal cabinet box.
- One (1) face frame.
- Two (2) drawers with soft close glides.
- Metal brackets, screws and required hardware.

NOTE: Use BEPL (Left) or BEPR (Right) panels to replace exterior sides if exposed. See page 57 for replacement base end panels.

Drawer Interior 9”H x 19-5/8”D *(top and bottom)*

Base Cabinets

Drawer Base - 3 Drawers

Cabinet Code	Dimensions
DB12	12”W x 34 ½”H x 24”D
DB15	15”W x 34 ½”H x 24”D
DB18	18”W x 34 ½”H x 24”D
DB21	21”W x 34 ½”H x 24”D
DB24	24”W x 34 ½”H x 24”D

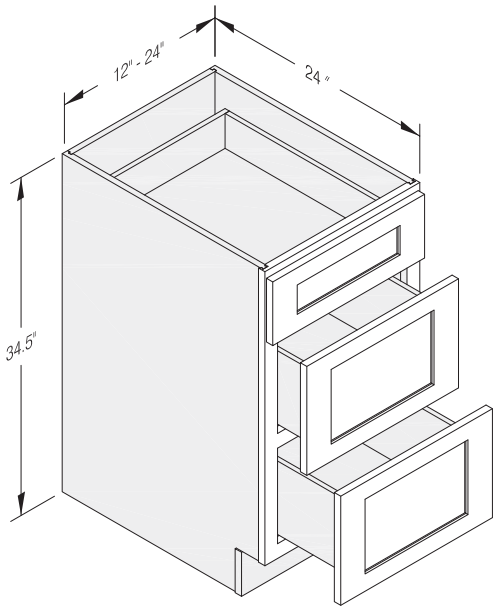

Includes:
- One (1) universal cabinet box.
- One (1) face frame.
- Three (3) drawers with soft close glides.
- Metal brackets, screws and required hardware.

NOTE: Use BEPL (Left) or BEPR (Right) panels to replace exterior sides if exposed. See page 57 for replacement base end panels.

Top drawer Interior 3-1/4”H x 19-5/8”D
Lower drawers Interior 6-7/8”H x 19-5/8” *(middle and bottom)*

Drawer Base - 3 Drawers

Cabinet Code	Dimensions
DB27	27”W x 34 ½”H x 24”D
DB30	30”W x 34 ½”H x 24”D
DB33	33”W x 34 ½”H x 24”D
DB36	36”W x 34 ½”H x 24”D

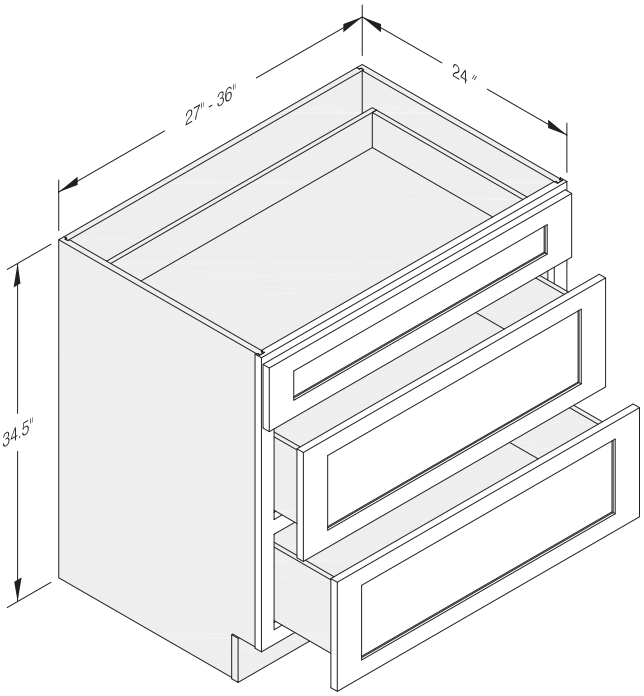

Includes:
- One (1) universal cabinet box.
- One (1) face frame.
- Three (3) drawers with soft close glides.
- Metal brackets, screws and required hardware.

NOTE: Use BEPL (Left) or BEPR (Right) panels to replace exterior sides if exposed. See page 57 for replacement base end panels.

Top drawer Interior 3-1/4”H x 19-5/8”D
Lower drawer Interior 6-7/8”H x 19-5/8” *(middle and bottom)*

Base Cabinets

Lazy Susan Corner Cabinets - (L / R)

Cabinet Code	Dimensions
LS33	33”W x 34 ½”H x 24”D
LS36	36”W x 34 ½”H x 24”D

Includes:
- One (1) universal cabinet box.
- One (1) face frame.
- One (1) Bi-fold door with soft close hinges.
- One (1) adjustable shelf with metal clips.
- Two (2) lazy Susans.
- Metal brackets, screws and required hardware.

NOTE: Use BEPL (Left) or BEPR (Right) panels to replace exterior sides if exposed. See page 57 for replacement base end panels.

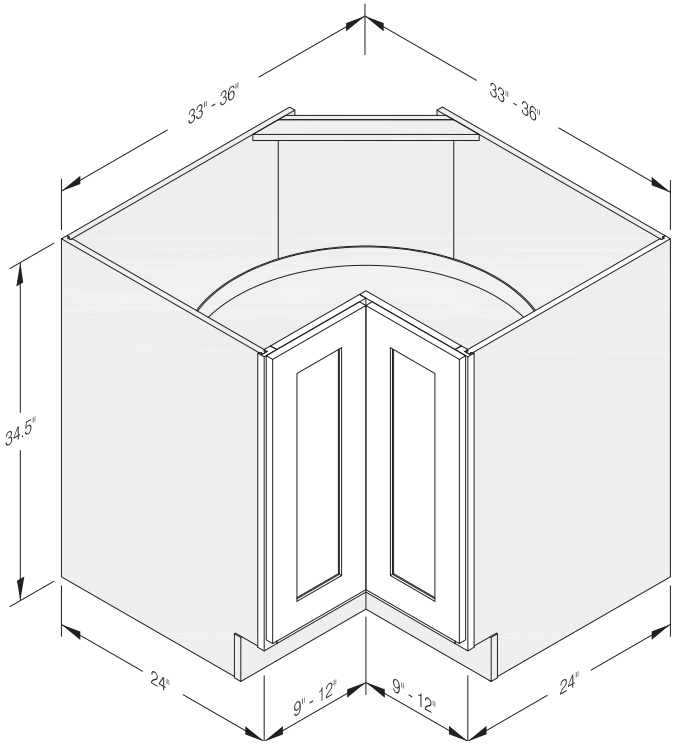

Easy Reach Corner Cabinets - (L / R)

Cabinet Code	Dimensions
BER33	33”W x 34 ½”H x 24”D
BER36	36”W x 34 ½”H x 24”D

Includes:
- One (1) universal cabinet box.
- One (1) face frame.
- One (1) Bi-fold door with soft close hinges.
- One (1) adjustable shelf with metal clips.
- Metal brackets, screws and required hardware.

NOTE: Use BEPL (Left) or BEPR (Right) panels to replace exterior sides if exposed. See page 57 for replacement base end panels.

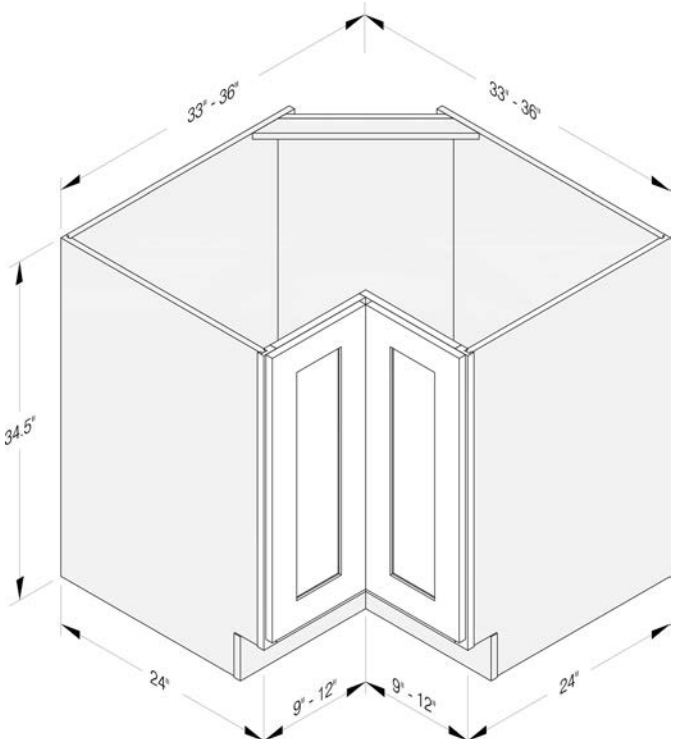

Base Cabinets

Blind Base Corner Cabinets - (L / R)

Cabinet Code	Dimensions
BBC39	39”W x 34 ½”H x 24”D
BBC42	42”W x 34 ½”H x 24”D

Includes:
- One (1) universal cabinet box.
- One (1) face frame.
- One (1) drawer with soft close glides.
- One (1) door with soft close hinges.
- One (1) adjustable shelf with metal clips.
- Metal brackets, screws and required hardware.

NOTE: Use BEPL (Left) or BEPR (Right) panels to replace exterior sides if exposed. See page 57 for replacement base end panels.

BBC39- Pull cabinet 4.5” from corner for correct spacing. 3” perpendicular filler required before adjacent cabinet.

BBC42- Pull cabinet 3” from corner for correct spacing. 3” perpendicular filler required before adjacent cabinet.

Drawer Interior 3-1/4”H x 19-5/8”D

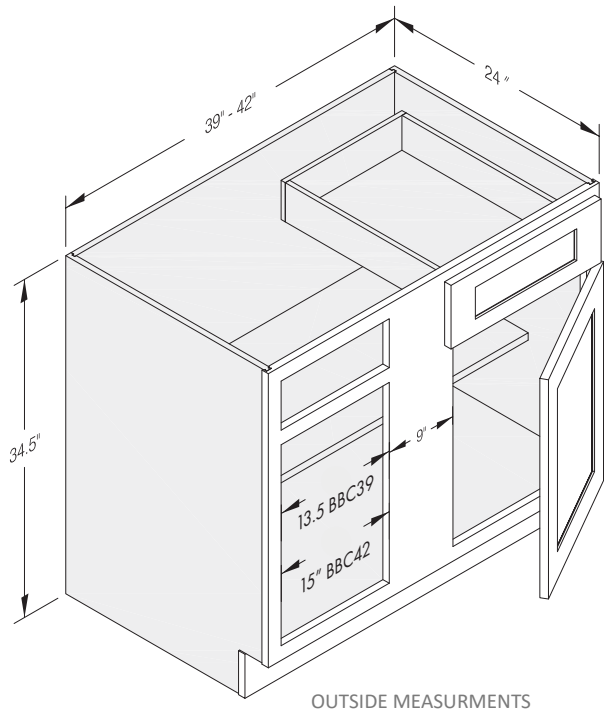

OUTSIDE MEASURMENTS

BBC39 DOOR	16”W x 22 9/16”H
BBC39 DRAWER	16”W x 6 ¾”H
BBC42 DOOR	17 ½”W x 22 9/16”H
BBC42 DRAWER	17 ½”W x 6 ¾”H

Sink Base - 2 Tip-outs & 2 Doors

Cabinet Code	Dimensions
SB24	24”W x 34 ½”H x 24”D
SB27	27”W x 34 ½”H x 24”D
SB30	30”W x 34 ½”H x 24”D
SB33	33”W x 34 ½”H x 24”D
SB36	36”W x 34 ½”H x 24”D

Includes:
- One (1) universal cabinet box.
- One (1) face frame.
- Two (2) tip out drawers with trays.
- Two (2) doors with soft close hinges.
- One (1) adjustable shelf with metal clips.
- Metal brackets, screws and required hardware.

NOTE: Use BEPL (Left) or BEPR (Right) panels to replace exterior sides if exposed. See page 57 for replacement base end panels.

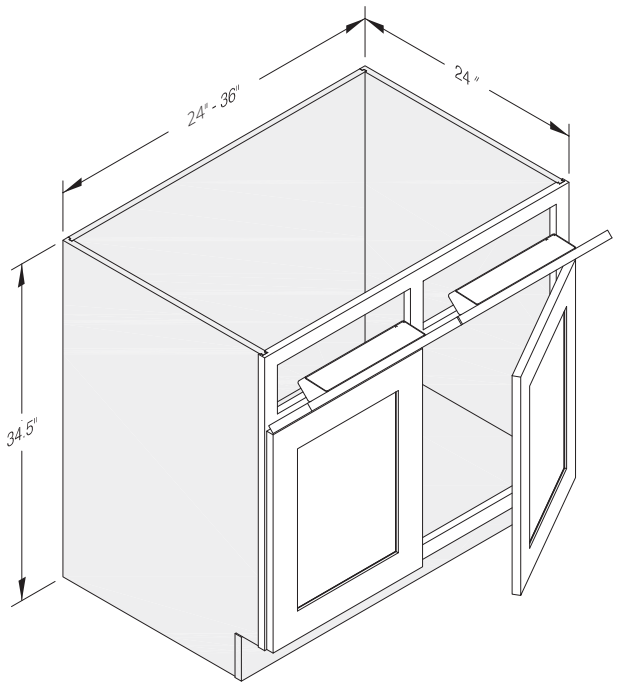

Base Cabinets

Corner Sink Base Cabinet

Cabinet Code	Dimensions
CSB36	36”W x 34 ½”H x 24”D

Includes:
- One (1) universal cabinet box.
- One (1) face frame.
- One (1) tip out drawer with tray.
- One (1) door with soft close hinges.
- Metal brackets, screws and required hardware.

NOTE: Use BEPL (Left) or BEPR (Right) panels to replace exterior sides if exposed. See page 57 for replacement base end panels.

1/4” fillers are needed on both sides of the Corner Sink Base cabinet to allow for drawer & door clearance. Scribe molding can be used as 1/4” filler.

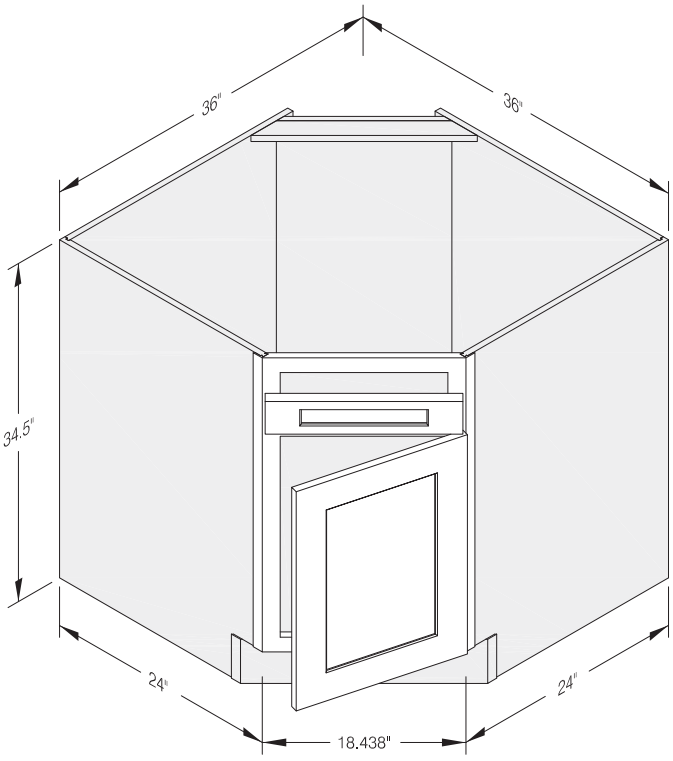

Farm Sink Base Cabinet

Cabinet Code	Dimensions
FSB36	36’’W x 34 ½’’H x 24’’D

Includes:
- One (1) universal cabinet box.
- One (1) face frame.
- Two (2) doors with soft close hinges.
- Metal brackets, screws and required hardware.

NOTE: Use BEPL (Left) or BEPR (Right) panels to replace exterior sides if exposed. See page 57 for replacement base end panels.

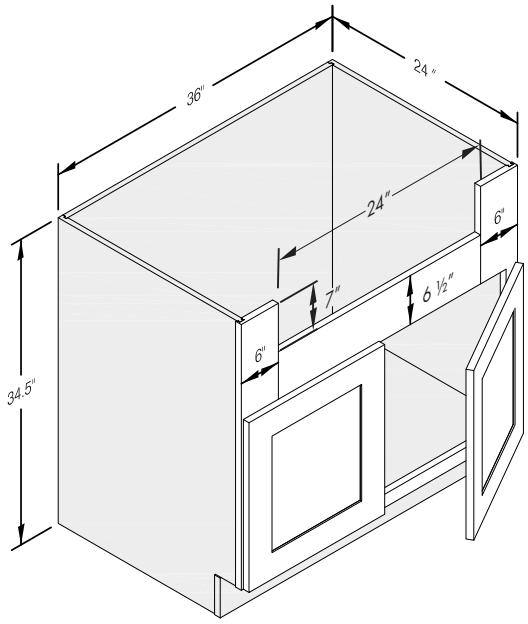

Base Cabinets

Microwave Base Cabinet - 1 Drawer

Cabinet Code	Dimensions
MDB30	30’’W x 34 ½’’H x 24’’D

Includes:
- One (1) universal cabinet box.
- One (1) face frame.
- One (1) drawer with soft close glides.
- Metal brackets, screws and required hardware.

NOTE: Microwave base cabinets have finished exteriors to match door style.

Drawer Interior 6-7/8”H x 19-5/8”

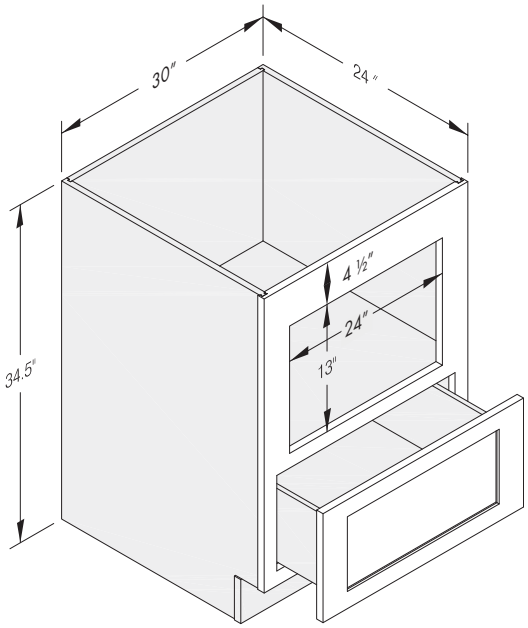

Spice Pull Base Cabinet

Cabinet Code	Dimensions
SP09	9”W x 34 ½”H x 24”D

Includes:
- One (1) universal cabinet box.
- One (1) face frame.
- One (1) door with soft close glides
- Three (3) fixed pul out shelves.
- Metal brackets, screws and required hardware.

NOTE: Spice pull cabinets are pre-assembled with finished exteriors to match door style.

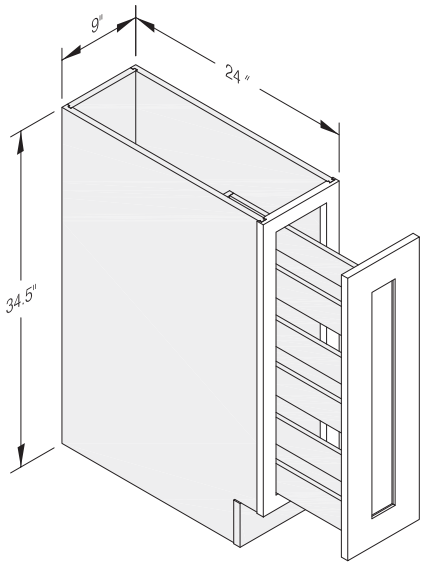

Base Cabinets

Base End Cabinet

Cabinet Code	Dimensions
BEC24	24”W x 34 ½”H x 24”D

Includes:
- One (1) universal cabinet box.
- Two (2) angled face frames.
- Two (2) doors with soft close hinges.
- One (1) adjustable shelf with metal clips.
- Metal brackets, screws and required hardware.

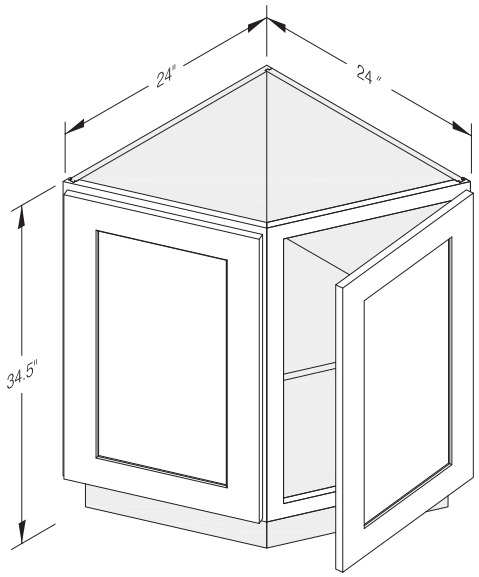

Base Transitional Cabinet

Cabinet Code	Dimensions
BTR12	12’’W x 34 ½’’H x 24’’D
BTL12	12’’W x 34 ½’’H x 24’’D

Includes:
- One (1) universal cabinet box.
- One (1) face frame.
- One (1) door with soft close hinges.
- Metal brackets, screws and required hardware.

NOTE: Use BSV panel to skin exterior sides or modified wall end panel if exposed. See page 58 for panels.

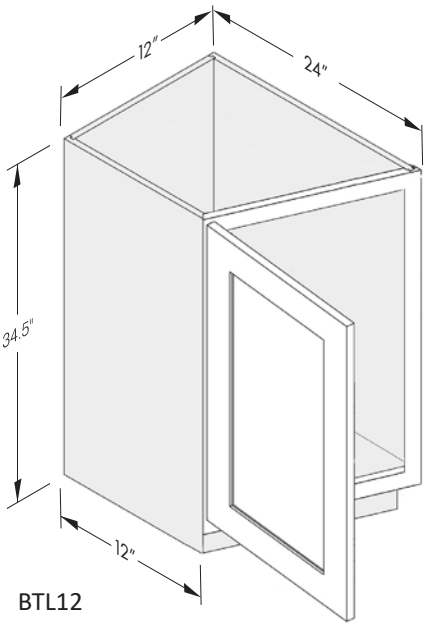

BTL12

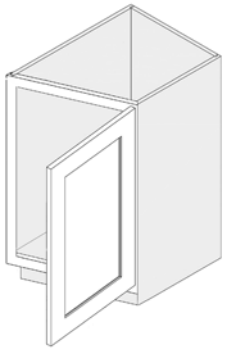
BTR12

ADA Base Cabinets

Tray Base Cabinet

Cabinet Code	Dimensions
TB09ADA	9”W x 32 ½”H x 24”D

Includes:
- One (1) universal cabinet box.
- One (1) face frame.
- One (1) door with soft close hinges.
- One (1) adjustable shelf with metal clips.
- Metal brackets, screws and required hardware.

NOTE: Use BEPL (Left) or BEPR (Right) panels to replace exterior sides if exposed. See page 57 for replacement base end panels.

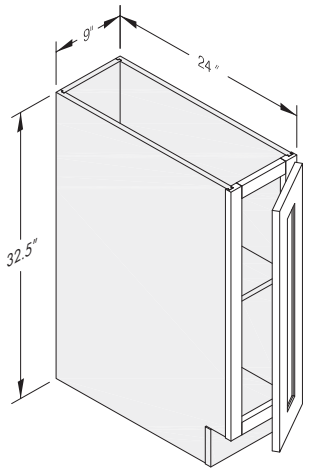

ADA Base Cabinets - 1 Drawer & 1 Door

Cabinet Code	Dimensions
B12ADA	12”W x 32 ½”H x 24”D
B15ADA	15”W x 32 ½”H x 24”D
B18ADA	18”W x 32 ½”H x 24”D
B21ADA	21”W x 32 ½”H x 24”D

Includes:
- One (1) universal cabinet box.
- One (1) face frame.
- One (1) drawer with soft close glides.
- One (1) door with soft close hinges.
- One (1) adjustable shelf with metal clips.
- Metal brackets, screws and required hardware.

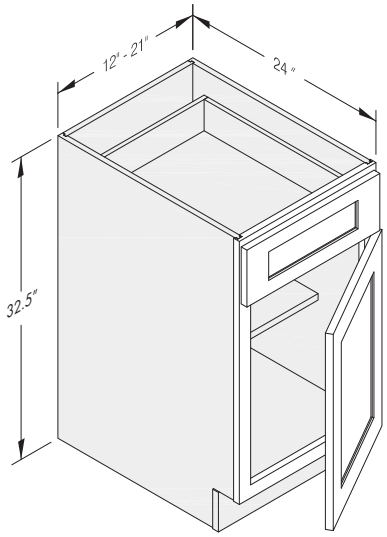

NOTE: Use BEPL (Left) or BEPR (Right) panels to replace exterior sides if exposed. See page 57 for replacement base end panels.

Drawer Interior 3-1/4”H x 19-5/8”D

ADA Base Cabinets - 1 Drawer & 2 Doors

Cabinet Code	Dimensions
B24ADA	24”W x 32 ½”H x 24”D
B27ADA	27”W x 32 ½”H x 24”D

Includes:
- One (1) universal cabinet box.
- One (1) face frame.
- One (1) drawer with soft close glides.
- Two (2) doors with soft close hinges.
- One (1) adjustable shelf with metal clips.
- Metal brackets, screws and required hardware.

NOTE: Use BEPL (Left) or BEPR (Right) panels to replace exterior sides if exposed. See page 57 for replacement base end panels.

Drawer Interior 3-1/4”H x 19-5/8”D

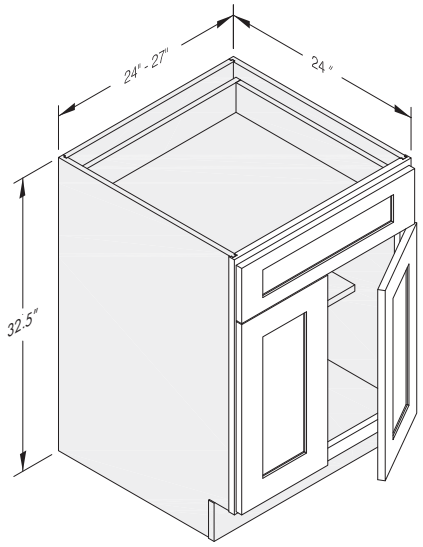

ADA Base Cabinets - 2 Drawers & 2 Doors

Cabinet Code	Dimensions
B30ADA	30”W x 32 ½”H x 24”D
B36ADA	36”W x 32 ½”H x 24”D

Includes:
- One (1) universal cabinet box.
- One (1) face frame.
- Two (2) drawers with soft close glides.
- Two (2) doors with soft close hinges.
- One (1) adjustable shelf with metal clips.
- Metal brackets, screws and required hardware.

NOTE: Use BEPL (Left) or BEPR (Right) panels to replace exterior sides if exposed. See page 57 for replacement base end panels.

Drawer Interior 3-1/4”H x 19-5/8”D

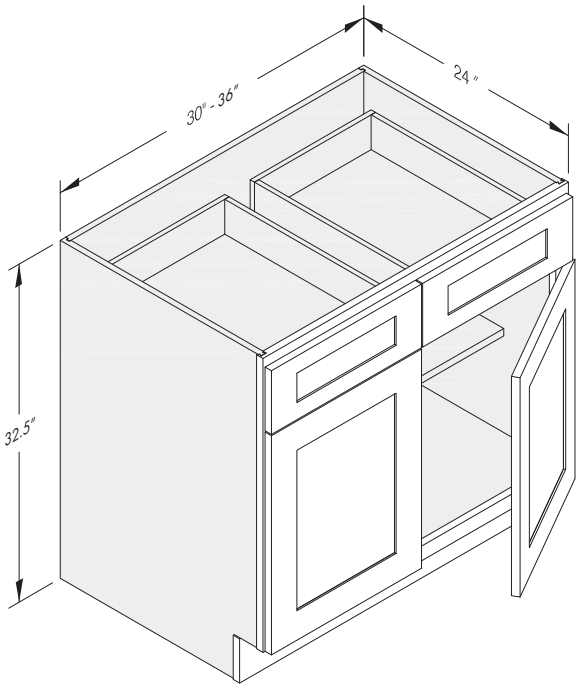

ADA Base Cabinets

ADA Drawer Base - 3 Drawers

Cabinet Code	Dimensions
DB12ADA	12”W x 32 ½”H x 24”D
DB15ADA	15”W x 32 ½”H x 24”D
DB18ADA	18”W x 32 ½”H x 24”D

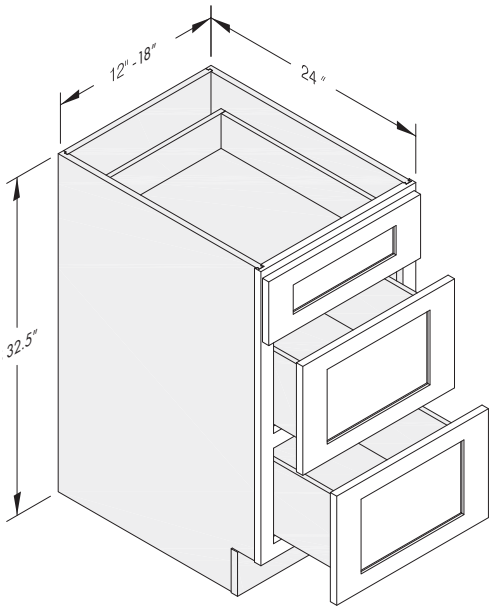

Includes:
- One (1) universal cabinet box.
- One (1) face frame.
- Three (3) drawers with soft close glides.
- Metal brackets, screws and required hardware.

NOTE: Use BEPL (Left) or BEPR (Right) panels to replace exterior sides if exposed. See page 57 for replacement base end panels.

Top drawer Interior 3-1/4”H x 19-5/8”D
Lower drawers Interior 6-7/8”H x 19-5/8” *(middle and bottom)*

ADA Removable Front Sink Base - 1 Dummy Drawer & 2 Doors

Cabinet Code	Dimensions
SBR30ADA	30”W x 32 ½”H x 24”D
SBR33ADA	33”W x 32 ½”H x 24”D
SBR36ADA	36”W x 32 ½”H x 24”D

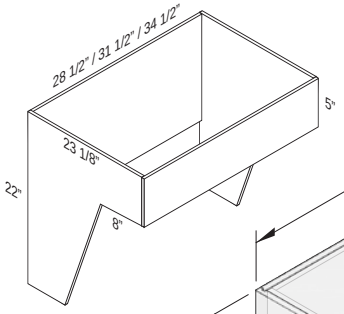

Apron Insert

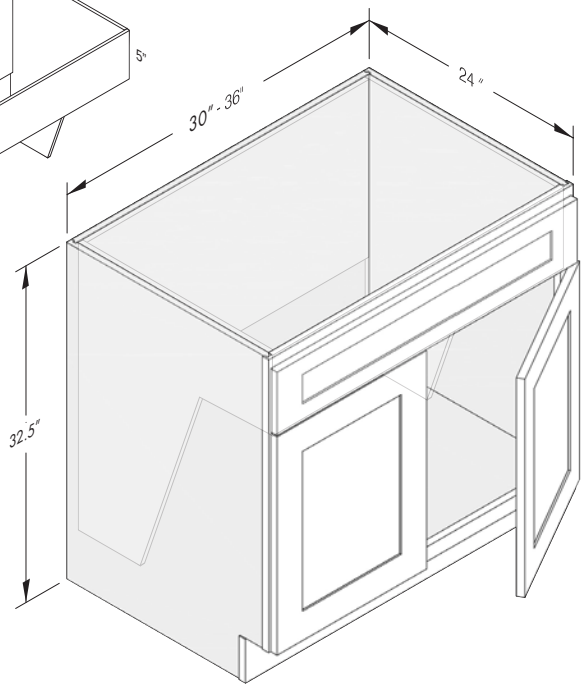

Includes:
- One (1) universal cabinet box.
- One (1) face frame.
- One (1) dummy drawer.
- Two (2) doors with soft close hinges.
- One (1) adjustable shelf with metal clips.
- Metal brackets, screws and required hardware.

NOTE: Use BEPL (Left) or BEPR (Right) panels to replace exterior sides if exposed. See page 57 for replacement base end panels.

ADA Base Cabinets

ADA Lazy Susan Corner Cabinets - (L / R)

Cabinet Code	Dimensions
LS36ADA	36”W x 32 ½”H x 24”D

Includes:
- One (1) universal cabinet box.
- One (1) face frame.
- One (1) Bi-fold door with soft close hinges.
- One (1) adjustable shelf with metal clips.
- Two (2) lazy Susans.
- Metal brackets, screws and required hardware.

NOTE: Use BEPL (Left) or BEPR (Right) panels to replace exterior sides if exposed. See page 57 for replacement base end panels.

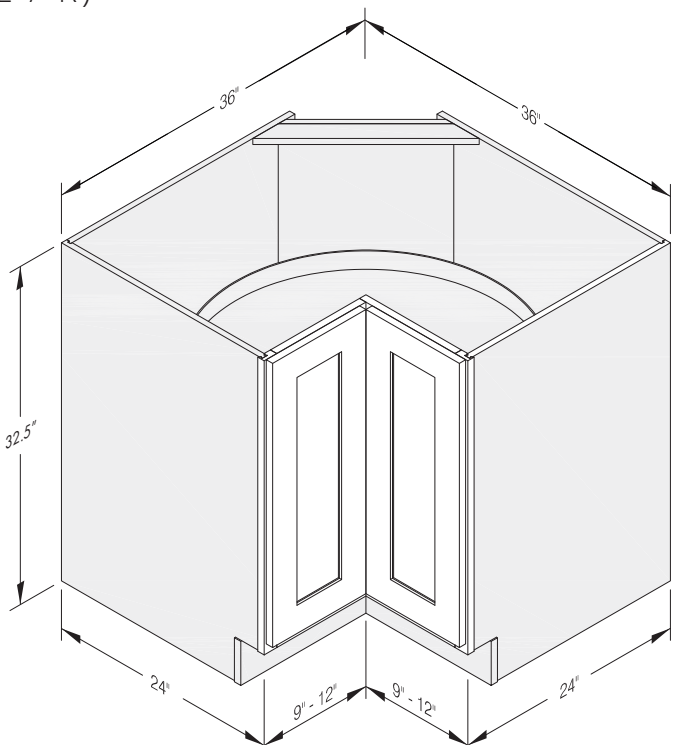

Blind Base Corner Cabinets - (L / R)

Cabinet Code	Dimensions
BBC39ADA	39”W x 32 ½”H x 24”D

Includes:
- One (1) universal cabinet box.
- One (1) face frame.
- One (1) drawer with soft close glides.
- One (1) door with soft close hinges.
- One (1) adjustable shelf with metal clips.
- Metal brackets, screws and required hardware.

NOTE: Use BEPL (Left) or BEPR (Right) panels to replace exterior sides if exposed. See page 57 for replacement base end panels.

BBC39- Pull cabinet 4.5” from corner for correct spacing. 3” perpendicular filler required before adjacent cabinet.

Drawer Interior 3-1/4”H x 19-5/8”D

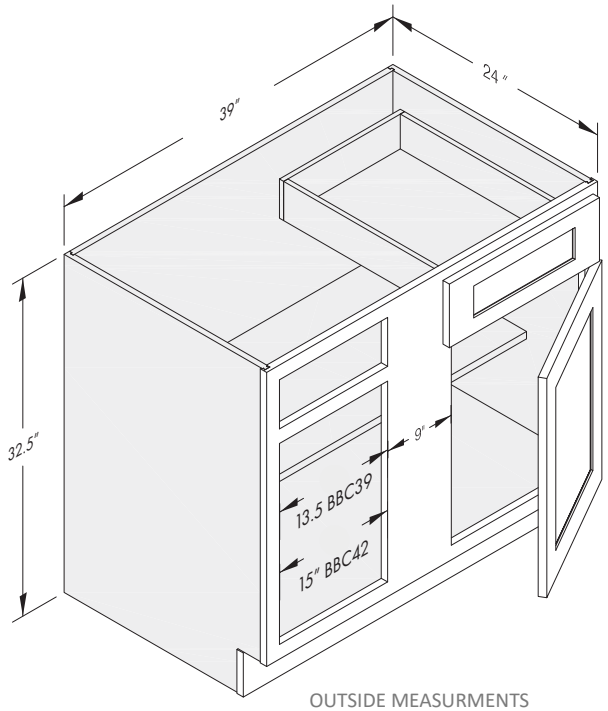

OUTSIDE MEASURMENTS

BBC39ADA DOOR	16”W x 20⅝”H
BBC39ADA DRAWER	16”W x 6 ¾”H



PANTRY & OVEN CABINETS

Pantry & Wall Oven Cabinets

Wall Pantry Cabinet - Single Door

Cabinet Code	Dimensions
WP1884	18”W x 84”H x 24”D
WP1890	18”W x 90”H x 24”D
WP1896	18”W x 96”H x 24”D

Includes:
- One (1) universal cabinet box.
- One (1) face frame.
- Two (2) doors with soft close hinges.
- Two (2) adjustable top shelves with metal clips in 84” & 90”H.
- Three (3) adjustable top shelves with metal clips in 96”H.
- Three (3) bottom roll out trays with glides.
- Metal brackets, screws and required hardware.

NOTE: Finished exteriors to match door style.

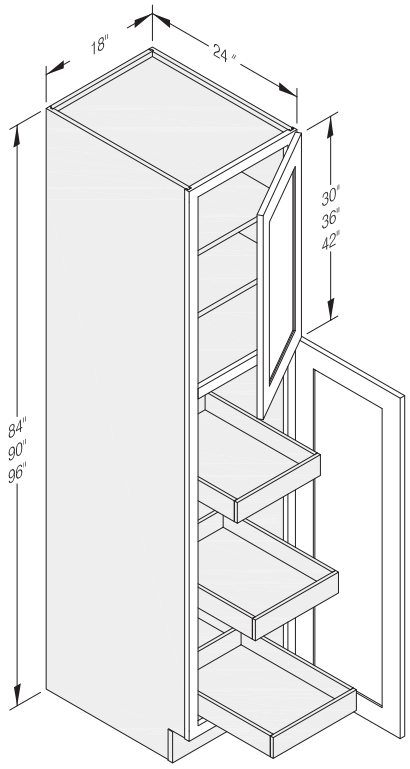

Wall Pantry Cabinet - Double Door

Cabinet Code	Dimensions
WP2484	24”W x 84”H x 24”D
WP2490	24”W x 90”H x 24”D
WP2496	24”W x 96”H x 24”D
WP3084	30”W x 84”H x 24”D
WP3090	30”W x 90”H x 24”D
WP3096	30”W x 96”H x 24”D

Includes:
- One (1) universal cabinet box.
- One (1) face frame.
- Four (4) doors with soft close hinges.
- Two (2) adjustable top shelves with metal clips in 84” & 90”H.
- Three (3) adjustable top shelves with metal clips in 96”H.
- Three (3) bottom roll out trays with glides.
- Metal brackets, screws and required hardware.

NOTE: Finished exteriors to match door style.

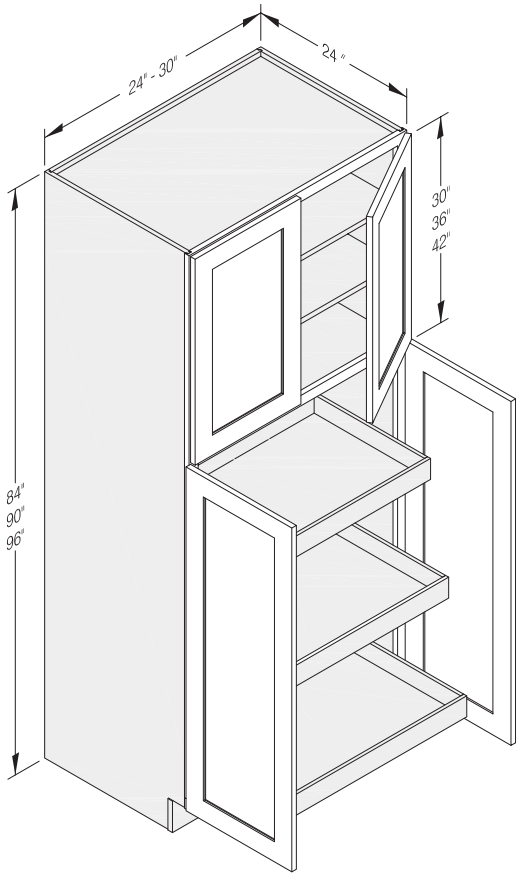

Pantry & Wall Oven Cabinets

Microwave Wall Pantry Cabinet

Cabinet Code	Dimensions
MWP278424	27”W x 84”H x 24”D
MWP279024	27”W x 90”H x 24”D
MWP279624	27”W x 96”H x 24”D

Includes:
- One (1) universal cabinet box.
- One (1) face frame.
- Four (4) doors with soft close hinges.
- Two (2) adjustable top shelves with metal clips in 84” & 90”H.
- Three (3) adjustable top shelves with metal clips in 96”H.
- One (1) drawer with soft close glides.
- Two (2) bottom roll out trays with glides.
- Metal brackets, screws and required hardware.

NOTE: Finished exteriors to match door style. 18” High center drawer can be modified to fit a microwave.

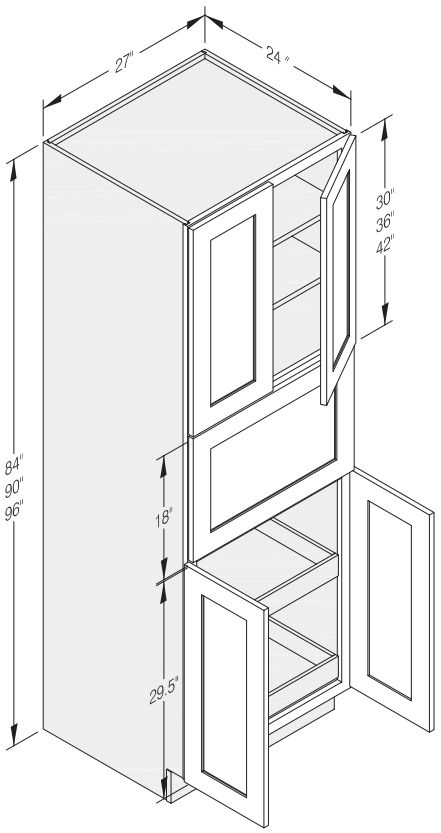

Oven Cabinet

Cabinet Code	Dimensions
OC338424	33”W x 84”H x 24”D
OC339024	33”W x 90”H x 24”D
OC339624	33”W x 96”H x 24”D

Includes:
- One (1) universal cabinet box.
- One (1) face frame.
- Two (2) doors with soft close hinges.
- No shelf in 84” & 90”H.
- One (1) adjustable top shelf with metal clips in 96”H.
- Three (3) drawers with soft close glides.
- Metal brackets, screws and required hardware.

NOTE: Finished exteriors to match door style. Oven cabinet can be modified to fit a double oven or microwave & oven unit.

Top false drawer front 6-11/16”H
Top drawer Interior 3-1/4”H x 19-5/8”D
Middle drawer Interior 6-7/8”H x 19-5/8”
Lower drawer Interior 6-7/8”H x 19-5/8”

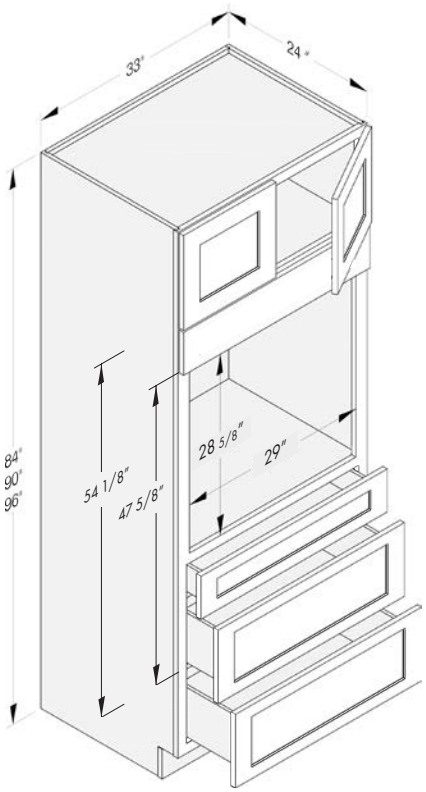

Double Oven Cabinet

Cabinet Code	Dimensions
OCD338424	33”W x 84”H x 24”D
OCD339024	33”W x 90”H x 24”D
OCD339624	33”W x 96”H x 24”D

Includes:
- One (1) universal cabinet box.
- One (1) face frame.
- Two (2) doors with soft close hinges.
- No shelf in 84” & 90”H.
- One (1) adjustable top shelf with metal clips in 96”H.
- One (1) drawer with soft close glides.
- Metal brackets, screws and required hardware.

NOTE: Finished exteriors to match door style.

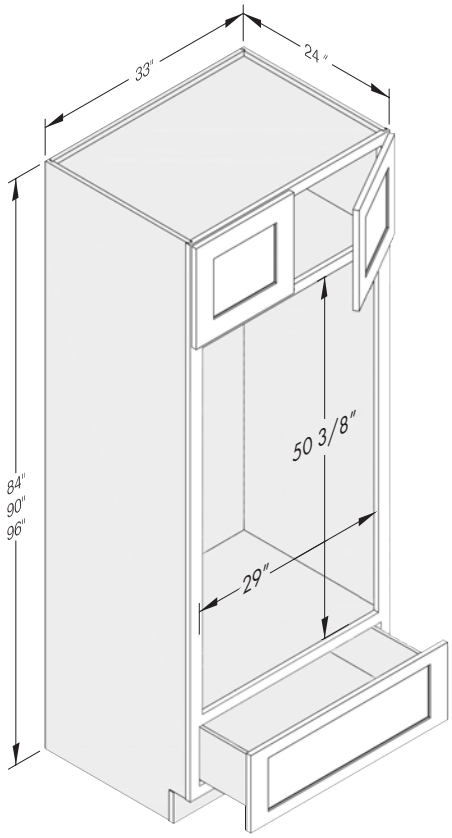



BATHROOM VANITIES

Bathroom Vanities

Vanity Sink Base

Cabinet Code	Dimensions
V2421	24”W x 34 ½”H x 21”D
V2721	27”W x 34 ½”H x 21”D
V3021	30”W x 34 ½”H x 21”D
V3621	36”W x 34 ½”H x 21”D

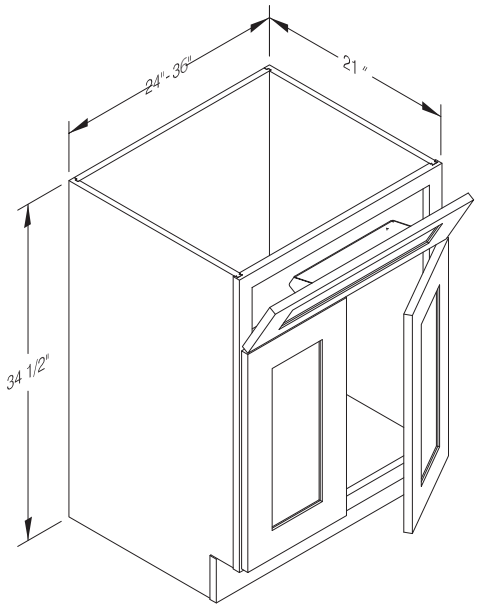

Includes:
- One (1) universal vanity cabinet box.
- One (1) face frame.
- One (1) tip out drawer with tray.
- Two (2) doors with soft close hinges.
- Metal brackets, screws and required hardware.

NOTE: Vanities have finished exteriors to match door style.

Vanity Drawer Base - 1 Drawer, 1 Door

Cabinet Code	Dimensions
VB12	12”W x 34 ½”H x 21”D
VB15	15”W x 34 ½”H x 21”D
VB18	18”W x 34 ½”H x 21”D

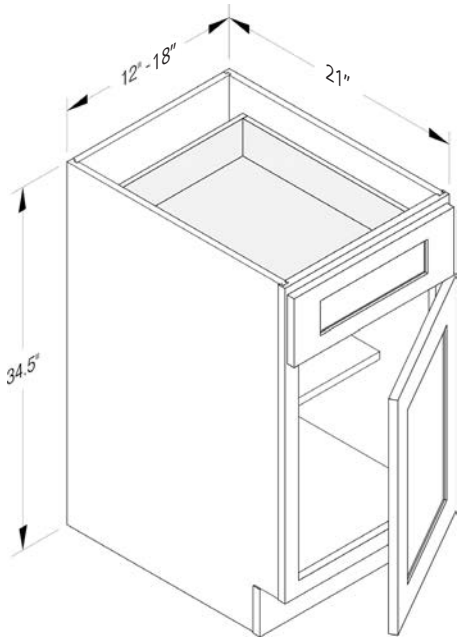

Includes:
- One (1) universal cabinet box.
- One (1) face frame.
- One (1) drawer with soft close glides.
- One (1) door with soft close hinges.
- One (1) adjustable shelf with metal clips.
- Metal brackets, screws and required hardware

NOTE: Vanities have finished exteriors to match door style.

Drawer Interior 3-1/4”H x 16-5/8”D

Vanity Drawer Base - 3 Drawers

Cabinet Code	Dimensions
VDB1221	12”W x 34 ½”H x 21”D
VDB1521	15”W x 34 ½”H x 21”D
VDB1821	18”W x 34 ½”H x 21”D
VDB2121	21”W x 34 ½”H x 21”D

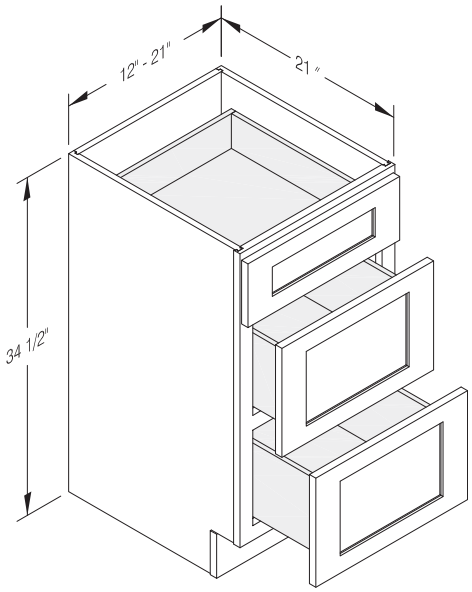

Includes:
- One (1) universal vanity cabinet box.
- One (1) face frame.
- Three (3) drawers with soft close glides.
- Metal brackets, screws and required hardware.

NOTE: Vanities have finished exteriors to match door style.

Top drawer Interior 3-1/4”H x 16-5/8”D
MIddle drawer Interior 6-7/8”H x 16-5/8”D
Lower drawer Interior 6-7/8”H x 16-5/8”D

Vanity Sink Base Combo - Two Drawers (L)

Cabinet Code	Dimensions
VSD3021L	30”W x 34 ½”H x 21”D
VSD3621L	36”W x 34 ½”H x 21”D

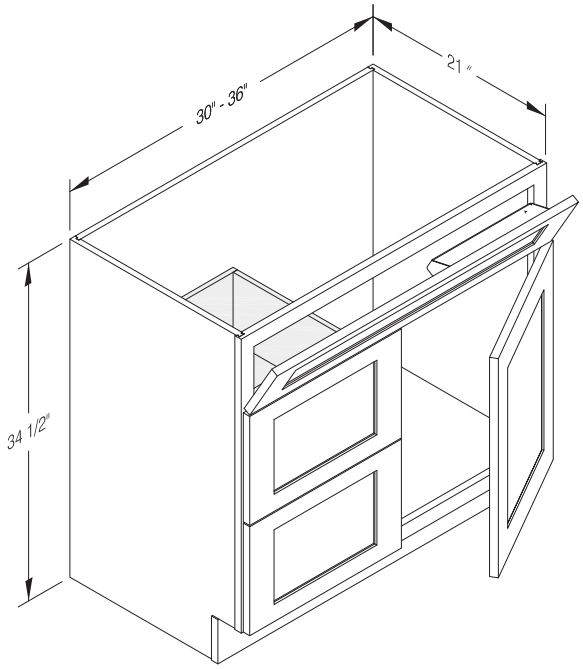

Includes:
- One (1) universal vanity cabinet box.
- One (1) face frame.
- One (1) tip out drawer with tray.
- One (1) door with soft close hinges.
- Two (2) drawers with soft close glides.
- Metal corner brackets, screws and required hardware.

NOTE: Vanities have finished exteriors to match door style.

Door 17-1/2”W (VSD30 & VSD36)
Drawer fronts VSD30: 11-3/16”H x 11-9/16”W
Drawer fronts VSD36: 11-3/16”H x 17-1/2”W

Bathroom Vanities

Vanity Sink Base Combo - Two Drawers (R)

Cabinet Code	Dimensions
VSD3021R	30”W x 34 ½”H x 21”D
VSD3621R	36”W x 34 ½”H x 21”D

Includes:
- One (1) universal vanity cabinet box.
- One (1) face frame.
- One (1) tip out drawer with tray.
- One (1) door with soft close hinges.
- Two (2) drawers with soft close glides.
- Metal corner brackets, screws and required hardware.

NOTE: Vanities have finished exteriors to match door style.

Door 17-1/2”W
Drawer fronts VSD30: 11-3/16”H x 11-9/16”W
Drawer fronts VSD36: 11-3/16”H x 17-1/2”W

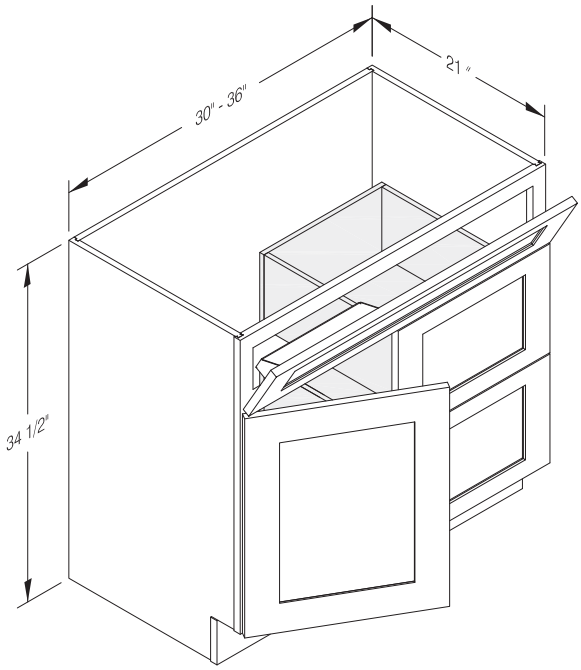

Vanity Sink Base Combo - Two Drawers (L)

Cabinet Code	Dimensions
VSD4221L	42”W x 34 ½”H x 21”D

Includes:
- One (1) universal vanity cabinet box.
- One (1) face frame.
- One (1) tip out drawer with tray.
- Two (2) doors with soft close hinges.
- Two (2) drawers with soft close glides.
- Metal brackets, screws and required hardware.

NOTE: Vanities have finished exteriors to match door style.

Doors 11-3/4”W
Drawer fronts 11-3/16”H x 17-1/2”W

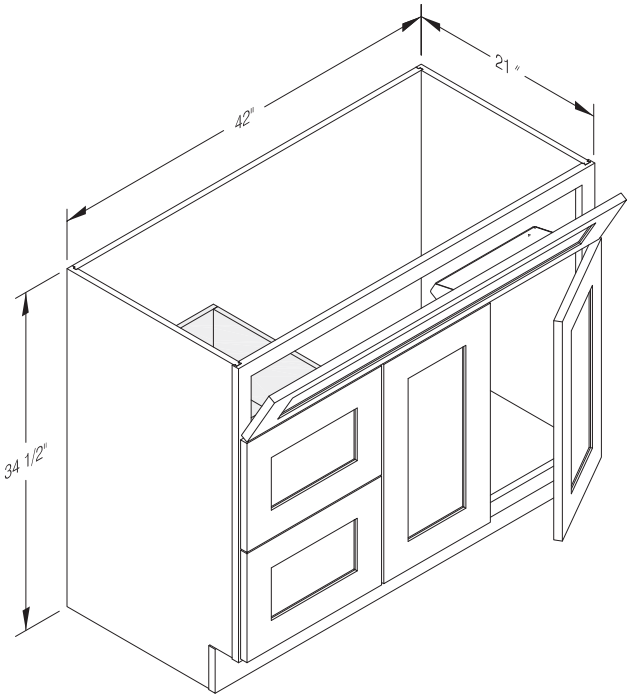

Bathroom Vanities

Vanity Sink Base Combo - Two Drawers (R)

Cabinet Code	Dimensions
VSD4221R	42”W x 34 ½”H x 21”D

Includes:
- One (1) universal vanity cabinet box.
- One (1) face frame.
- One (1) tip out drawer with tray.
- Two (2) doors with soft close hinges.
- Two (2) drawers with soft close glides.
- Metal brackets, screws and required hardware.

NOTE: Vanities have finished exteriors to match door style.

Doors 11-3/4”W
Drawer fronts 11-3/16”H x 17-1/2”W

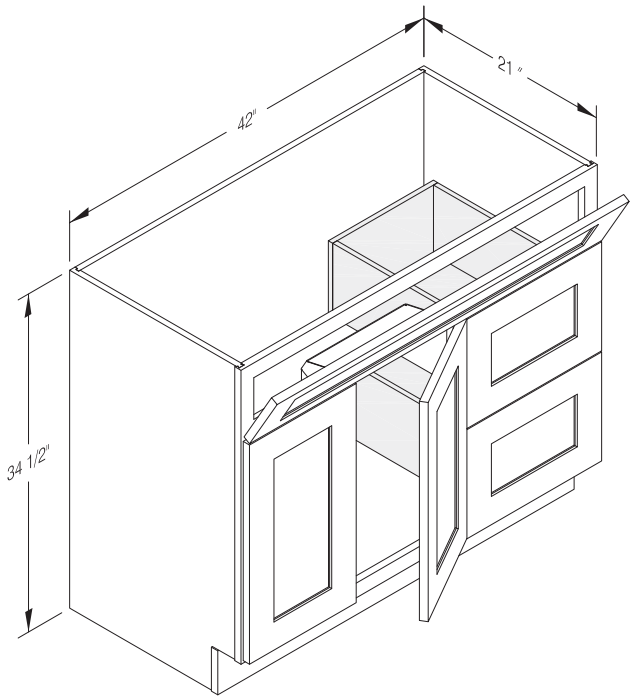

Vanity Sink Base Combo - Single Sink

Cabinet Code	Dimensions
VSD4821	48”W x 34 ½”H x 21”D
VSD6021	60”W x 34 ½”H x 21”D

Includes:
- One (1) universal vanity cabinet box.
- One (1) face frame.
- One (1) tip out drawer with tray.
- Two (2) doors with soft close hinges.
- Six (6) drawers with soft close glides.
- Metal corner brackets, screws and required hardware.

NOTE: Vanities have finished exteriors to match door style.

Doors (VSD48) 11-3/4”W
Doors (VSD60) 14-3/4”
Drawer fronts (VSD48) 11-3/16”H x 11-9/16”W
Drawer fronts (VSD60) 11-3/16”H x 14-1/2”W

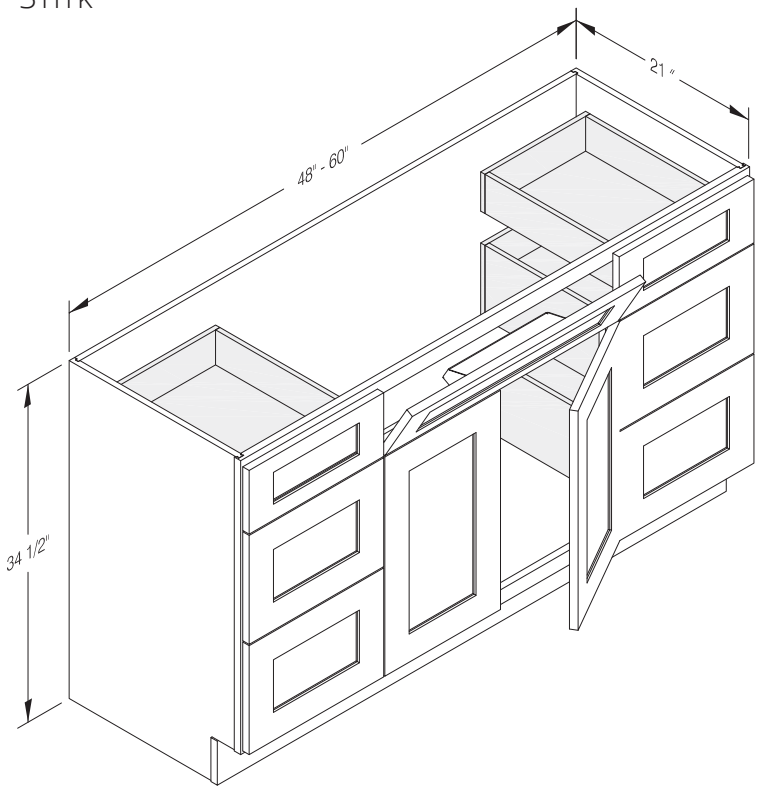

Bathroom Vanities

Vanity Sink Base Combo - Double Sink

Cabinet Code	Dimensions
VCD6021	60”W x 34 ½”H x 21”D

Includes:
- One (1) universal vanity cabinet box.
- One (1) face frame.
- Two (2) tip out drawers with trays.
- Four (4) doors with soft close hinges.
- Three (3) drawers with soft close glides.
- Metal corner brackets, screws and required hardware.

NOTE: Vanities have finished exteriors to match door style.

Doors 11-11/16”W
Drawer fronts 11-3/16”H x 11-9/16”W

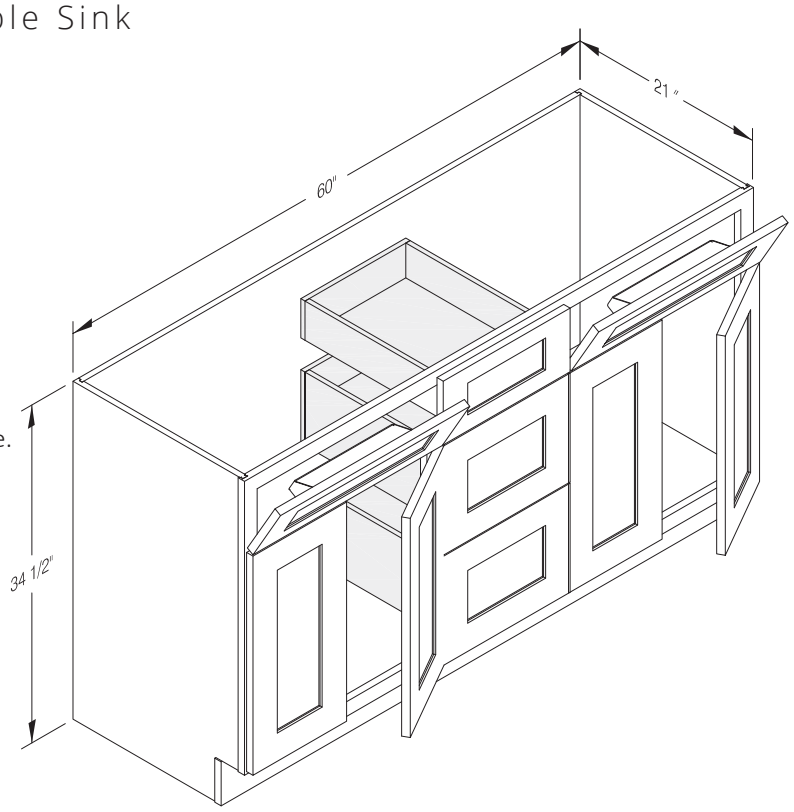

Countertop vanity Linen Cabinet - Two Drawers, One Door

Cabinet Code	Dimensions
DV1545	15”W x 45”H x 12”D

Includes:
- One (1) universal vanity cabinet box.
- One (1) face frame.
- One (1) door with soft close hinges.
- Two (2) drawers with soft close glides.
- Metal brackets, screws and required hardware.

NOTE: Vanities have finished exteriors to match door style.

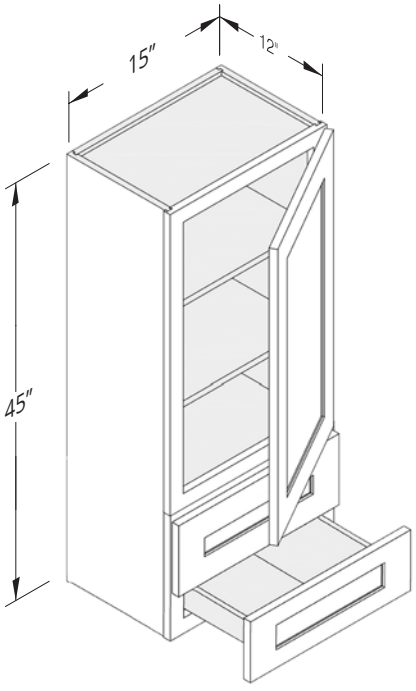

3 Drawer Wall Cabinet

Cabinet Code	Dimensions
WD1818	18”W x 18”H x 12”D

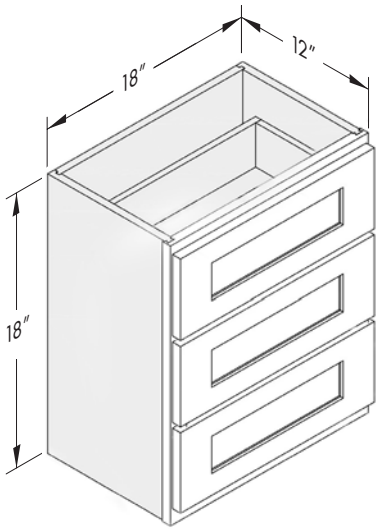

Includes:
- One (1) universal cabinet box.
- One (1) face frame.
- Three (3) drawers with soft close glides.
- Metal brackets, screws and required hardware.

NOTE: Use WSV or BP96361/4 panel to skin exterior sides if exposed. See page 56 & 58 for replacement skin panels.



MOULDINGS

Mouldings

Crown Molding - #2

Cabinet Code	Dimensions
CM2	7/8”W x 2 ¾”H x 96”L

Includes:
- One (1) piece of moulding

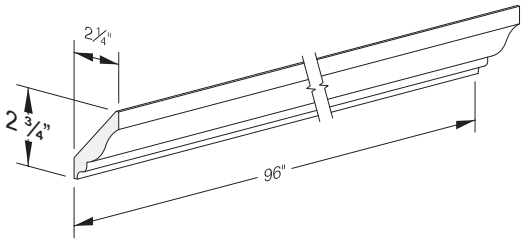

Crown Molding - #4

Cabinet Code	Dimensions
CM4	7/8”W x 4 ¼”H x 96”L

Includes:
- One (1) piece of moulding

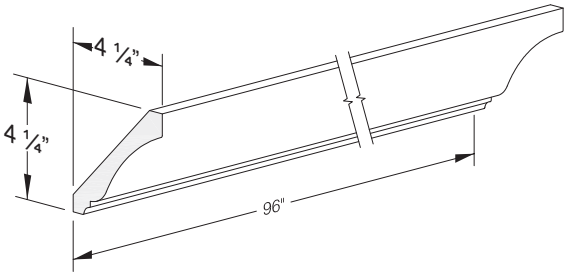

Crown Molding - #6

Cabinet Code	Dimensions
CM6	3/4”W x 5 ¼”H x 96”L

Includes:
- One (1) piece of moulding

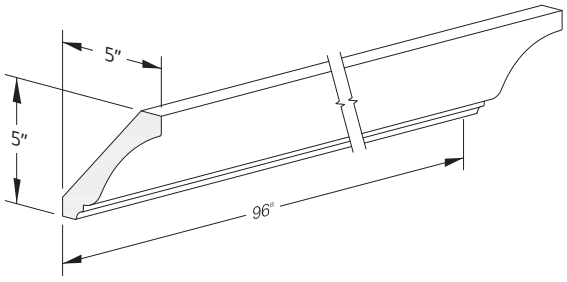

Shaker Crown Molding - #2

Cabinet Code	Dimensions
SCM2	3/4”W x 3 ¼”H x 96”L

Includes:
- One (1) piece of moulding

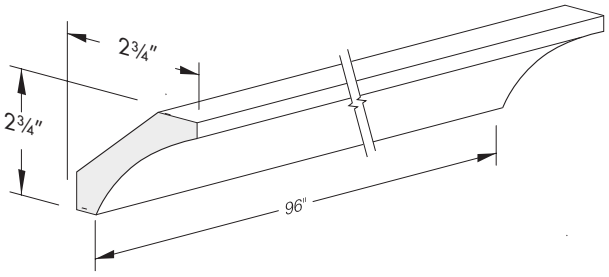

Shaker Crown Molding - #6

Cabinet Code	Dimensions
SCM6	3/4”W x 5 ⅜””H x 96”L

Includes:
- One (1) piece of moulding

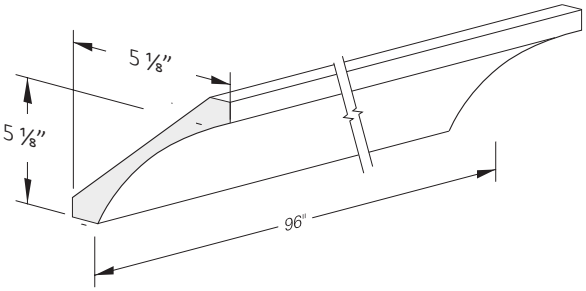

Mouldings

Chair Rail Moulding

Cabinet Code	Dimensions
CRM	¾”W x 1 ⅛”H x 96”L

Includes:
- One (1) piece of moulding.

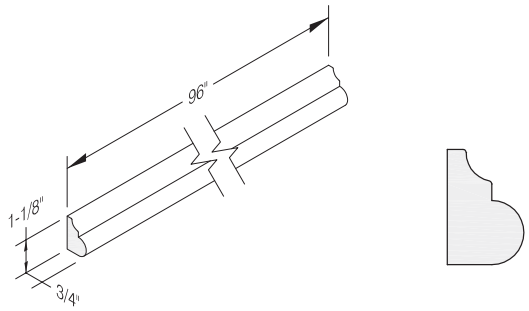

Light Rail Moulding

Cabinet Code	Dimensions
TLR	2 ¼”W x 1 ¾”H x 96”L

Includes:
- One (1) piece of moulding.

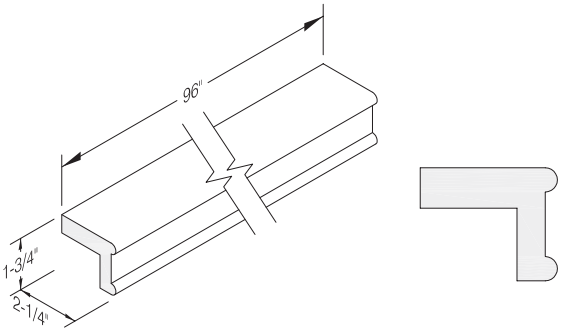

Light Rail Moulding

Cabinet Code	Dimensions
CLR	1 ½’’W x ¾’’H x 96’’L

Includes:
- One (1) piece of moulding.

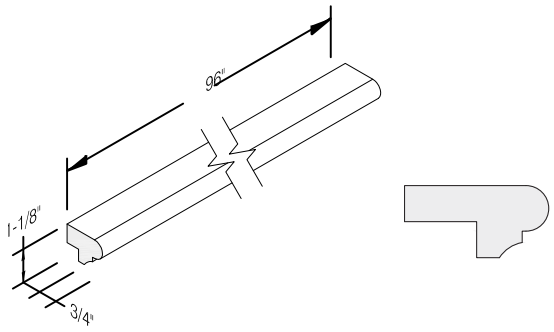

Outside Corner Moulding

Cabinet Code	Dimensions
OCM	1”W x 1”H x 96”L

Includes:
- One (1) piece of moulding.

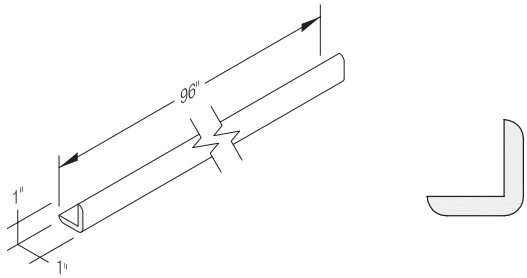

Quarter Round Moulding

Cabinet Code	Dimensions
QRM8	¾”W x ¾”H x 96”L

Includes:
- One (1) piece of moulding

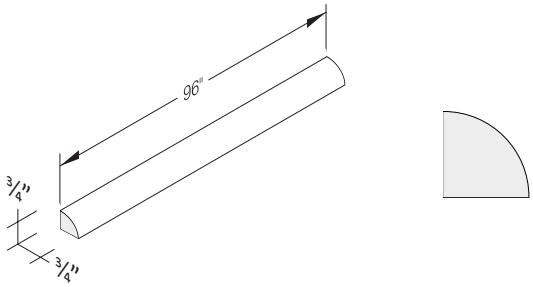

Mouldings

Scribe Moulding

Cabinet Code	Dimensions
SM	1/4”W x 3/4”H x 96”L

Includes:
- One (1) piece of moulding.

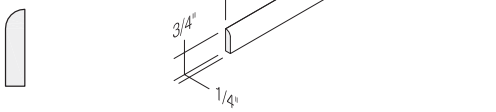

Baseboard Moulding

Cabinet Code	Dimensions
BBM	3/4”W x 4 7/16”H x 96”L

Includes:
- One (1) piece of moulding



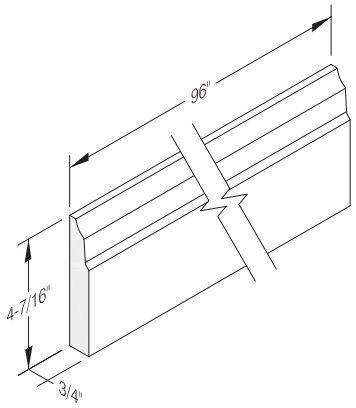

Shaker Baseboard Moulding

Cabinet Code	Dimensions
SBBM	3/4”W x 4 ½”H x 96”L

Includes:
- One (1) piece of moulding



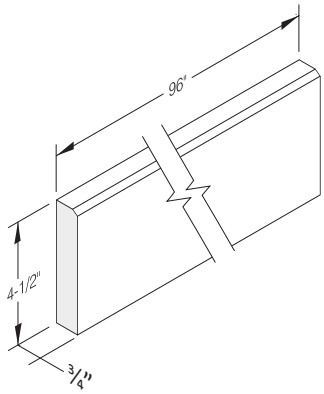

Toe Kick

Cabinet Code	Dimensions
TK	1/4”W x 4 ½”H x 96”L

Includes:
- One (1) piece of moulding



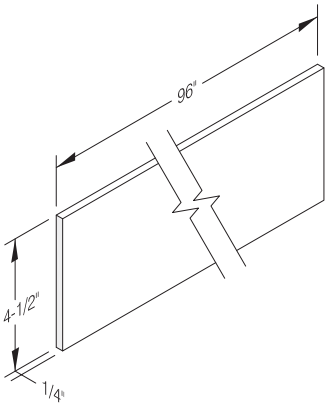

Mouldings

Angle Light Rail Moulding

Cabinet Code	Dimensions
ALRM	1 ½”W x 2”H x 96”L

Includes:
- One (1) piece of moulding.

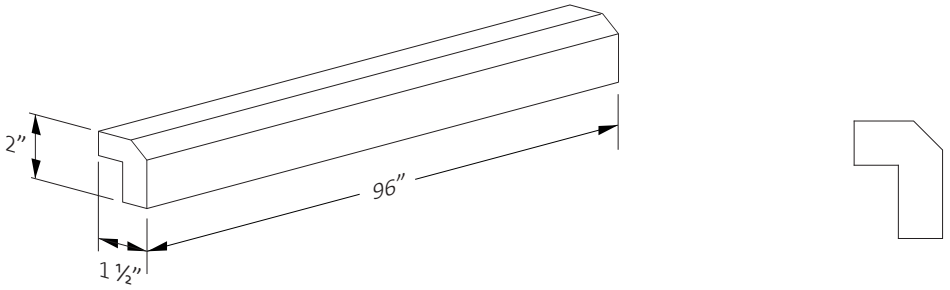

Angle Crown Moulding

Cabinet Code	Dimensions
ACM	½”W x 2 9/16””H x 96”L

Includes:
- One (1) piece of moulding.

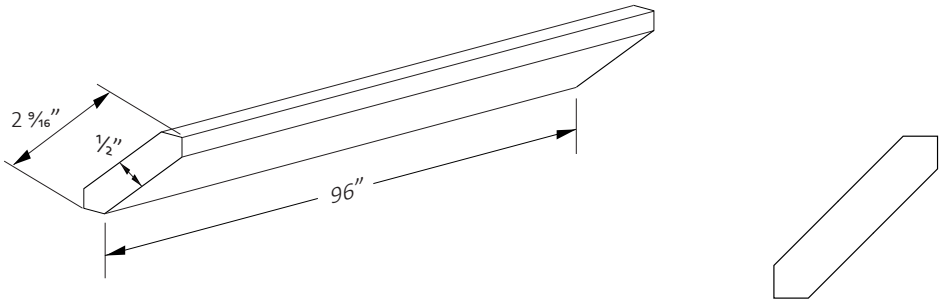

Large Angle Crown Moulding

Cabinet Code	Dimensions
LACM	¾”W x 4 ¼”H x 96”L

Includes:
- One (1) piece of moulding.

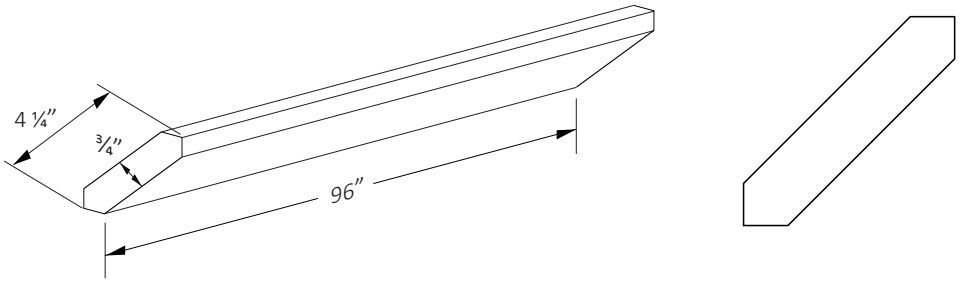



PANELS & FILLERS

Panels & Fillers

Dishwasher Panel with Return Gable

Cabinet Code	Dimensions
DWR36	24”W x 36”H x 3”D

Includes:
- One (1) return panel 24”W x 36”H x ⅝”D.
- One (1) front gable 3”W x 36”H x ¾”D.

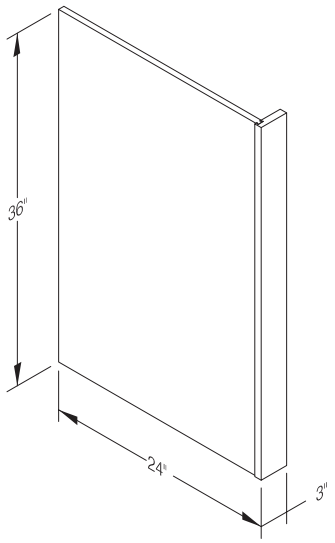

Refrigerator Panel with Return Gable

Cabinet Code	Dimensions
REP9630	30”W x 96”H x 1 ½”D

Includes:
- One (1) return panel 30”W x 96”H x ⅝”D.
- One (1) front gable 1 ½”W x 96”H x ¾”D.

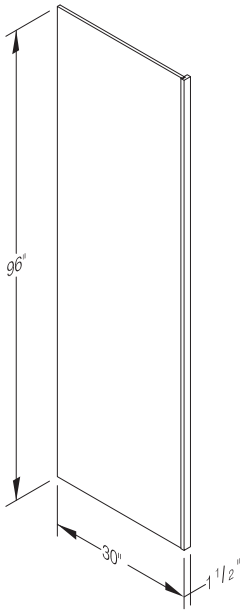

Finished Skin Panel

Cabinet Code	Dimensions
BP96361/4	96”W x 36”D x 1/4”H
BP96481/2	96”W x 48”D x 1/2”H

Includes:
- One (1) finished plywood panel

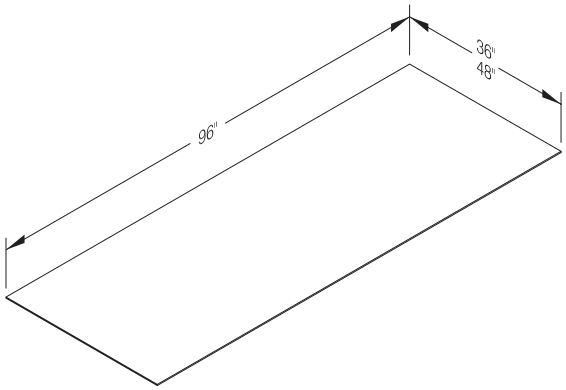

Panels & Fillers

Finished Plywood

Cabinet Code	Dimensions
FB4X83/4	48”W x 96”H x 3/4”D

Includes:
- One (1) finished plywood panel
- Finished on all 6 sides.

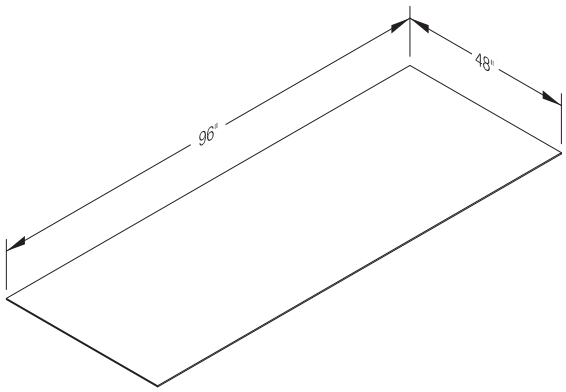

Base End Panel - (L / R)

Cabinet Code	Dimensions
BEPL	23 ⅝”W x 34 ½”H x 5/8”D
BEPR	23 ⅝”W x 34 ½”H x 5/8”D

Includes:
- One (1) finished replacement base end panel.

NOTE: Base end panels to replace natural finished end panels when exposed. Must be replaced during assembly.

French dovetail front edge for face frame connection.

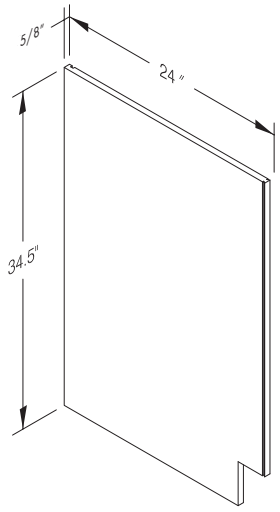

Wall End Panel - (L / R)

Cabinet Code	Dimensions
WEP30	11 ⅝”W x 30”H x 5/8”D
WEP36	11 ⅝”W x 36”H x 5/8”D
WEP42	11 ⅝”W x 42”H x 5/8”D

Includes:
- One (1) finished replacement wall end panel.

NOTE: Wall end panels to replace natural finished end panels when exposed. Must be replaced during assembly.

French dovetail front edge for face frame connection

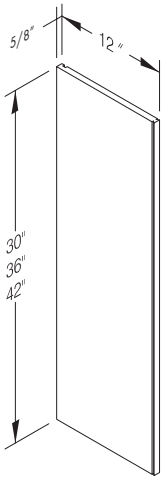

Panels & Fillers

Finished Skin Panels

Cabinet Code	Dimensions
BSV	23 ¼”W x 34 ½”H x ¼”D
WSV	11 ¼”W x 42”H x ¼”D

Includes:
- One (1) skin panel- Finished both sides

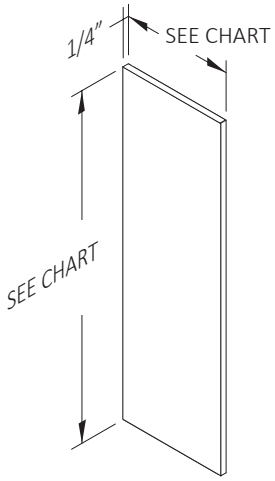

Wall Fillers

Cabinet Code	Dimensions
WF342	3”W x 42”H x 3/4”D
WF642	6”W x 42”H x 3/4”D

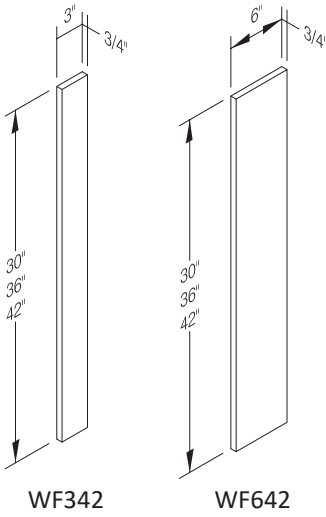

Tall Fillers

Cabinet Code	Dimensions
WF396	3”W x 96”H x 3/4”D
WF696	6”W x 96”H x 3/4”D

Includes:
- One (1) wall or tall filler

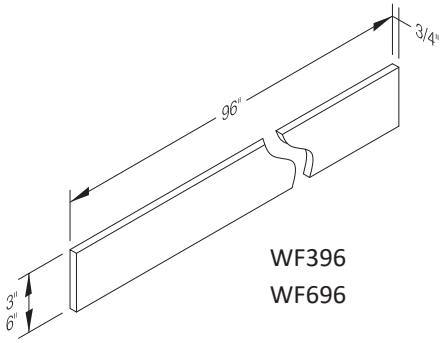

Base Fillers

Cabinet Code	Dimensions
BF3	3”W x 34 ½”H x ¾”D
BF6	6”W x 34 ½”H x ¾”D

Includes:
- One (1) base filler.

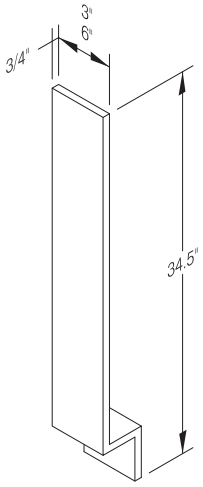



STORAGE & ORGANIZATION

Storage and Organization

Roll Out Trays

Cabinet Code	Dimensions
RD18	13 ⅞”W x 3”H x 19 5⁄16”D
RD21	16 ⅞”W x 3”H x 19 5⁄16”D
RD24	19 ⅞”W x 3”H x 19 5⁄16”D
RD27	22 ⅞”W x 3”H x 19 5⁄16”D
RD30	25 ⅞”W x 3”H x 19 5⁄16”D
RD33	28 ⅞”W x 3”H x 19 5⁄16”D
RD36	31 ⅞”W x 3”H x 19 5⁄16”D
RD39	34 ⅞”W x 3”H x 19 5⁄16”D
RD42	37 ⅞”W x 3”H x 19 5⁄16”D

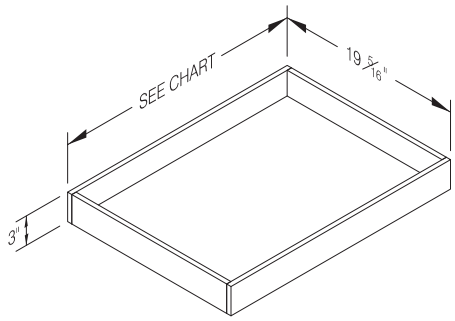

Includes:
- One (1) roll out tray.
- Two (2) drawer glides.

NOTE: Roll out trays have a natural wood finish.

Floating Finished Plywood Shelves

Cabinet Code	Dimensions
PNL1224	24”W x 1 ½”H x 12”D
PNL1230	30”W x 1 ½”H x 12”D
PNL1236	36”W x 1 ½”H x 12”D
PNL1248	48”W x 1 ½”H x 12”D

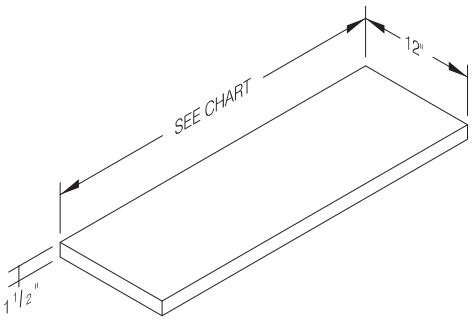

Includes:
- One (1) floating shlef.
- PNL1224- Three (3pc) bracket mount.
- PNL1230, PNK1236 & PNL1248 - Four (4pc) bracket mount.

Knee Drawer

Cabinet Code	Dimensions
KD30	30”W x 6”H x 21”D

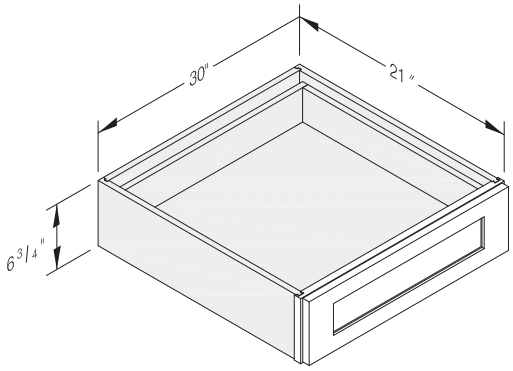

Includes:
- One (1) universal drawer box.
- One (1) drawer with soft close glides.
- Metal brackets, screws and required hardware.

Wine Rack - Euro Style

Cabinet Code	Dimensions
WRES0630	6”W x 30”H x 12”D
WRES0636	6”W x 36”H x 12”D

Includes:
- One (1) universal cabinet box.
- Six (6) compartments in WRES0630.
- Seven (7) compartments in WRES0636.
- Metal brackets, screws and required hardware.

NOTE: Wine racks have finished exteriors and interiors to match door style.

Used as wall cabinet, base cabinet, above fridge or stacked vertically or horizontally.

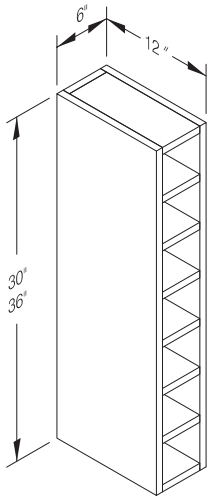

Wine Rack

Cabinet Code	Dimensions
WR2430	24”W x 30”H x 12”D
WR3018	30”W x 18”H x 12”D
WR3618	36”W x 18”H x 12”D

Includes:
- One (1) universal cabinet box.
- Ten (10) compartments in WR3018.
- Twelve (12) compartments in WR3618.
- Eighteen (18) compartments in WR2430.
- Metal brackets, screws and required hardware.

NOTE: Wine racks have finished exteriors and interiors to match door style.

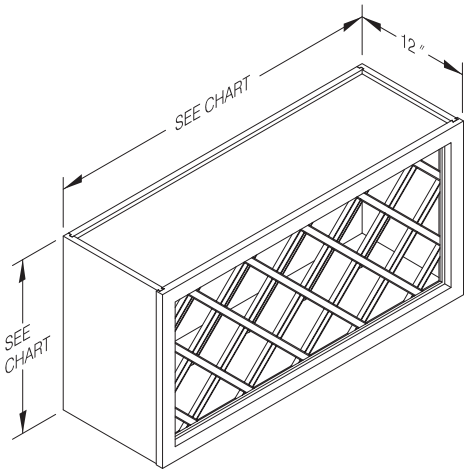

Stem Glass Holder

Cabinet Code	Dimensions
SGH36	36”W x 2”H x 12”D

Includes:
- One (1) glass rack.
- Holds up to 16 glasses

NOTE: Finished to match door style.

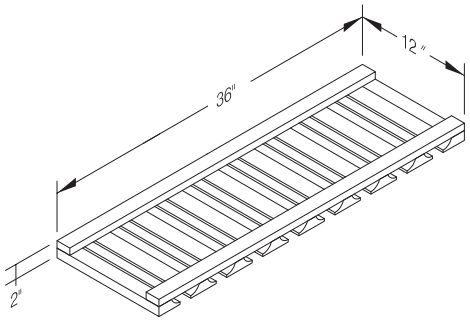

Drawer Inserts



KNIFE BLOCK DRAWER INSERT

The knife block insert for your kitchen drawer offers a sleek and safe solution to store your knives. It keeps your blades securely in place, protecting both your knives and fingers while freeing up counter space. Designed to fit neatly in most drawers, this insert provides easy access and organization, making meal prep more efficient and your kitchen more clutter-free.

KBI-21 - Fits B21 or DB21 Top Drawer



CUTLERY DRAWER INSERT

A cutlery drawer insert provides an organized and efficient way to store utensils, keeping your kitchen drawers neat and tidy. It prevents items from shifting around, making it easier to find what you need quickly, and protects your cutlery from scratches or damage, extending their lifespan.

CDI-18 - Fits B18 or DB18 Top Drawer

CDI-24 - Fits B24 or DB24 Top Drawer



DOUBLE CUTLERY DRAWER INSERT

The double cutlery drawer insert maximizes your kitchen's storage potential by providing two levels of organized space for utensils. With this design, you can easily separate and access different types of cutlery, keeping everything neatly in place. The double insert prevents clutter and makes it simple to find exactly what you need, enhancing both efficiency and kitchen aesthetics.

DCDI-18 - Fits B18 or DB18 Top Drawer

DCDI-24 - Fits B24 or DB24 Top Drawer

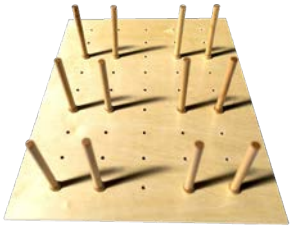

PEG ORGANIZER

Drawer inserts, like a peg system, offer a customizable storage solution for your kitchen drawers, making organization effortless. With adjustable pegs, you can configure the layout to securely fit dishes, pots, and containers of various sizes. This flexible design maximizes drawer space, keeps items from shifting, and ensures everything is within easy reach—adding convenience and order to your kitchen.

DPS-30 - Fits DB30 Lower Drawers



SPICE DRAWER

The spice drawer insert transforms your kitchen drawer into a tidy, easy-to-navigate spice haven, where every jar has its place. With angled rows that display labels clearly, you'll save time searching and enjoy effortless access to your favorite spices, keeping your kitchen both organized and beautifully functional.

STI-18 - Fits B18 or DB18 Top Drawer

STI-24 - Fits B24 or DB24 Top Drawer



HOODS & SPECIALTY CABINETS

Wood Range Hood - 36" and 42"W

Cabinet Code	Dimensions
RHA36	36"W x 30"H x 21"D
RHA42	42"W x 30"H x 21"D

Includes:
- One (1) wood range hood

RHA36- Inside usable space to cut for vent is approximatly 28 ¼"W x 18 ⅝"D.

RHA42- Inside usable space to cut for vent is approximatly 34 ¼"W x 18 ⅝"D.

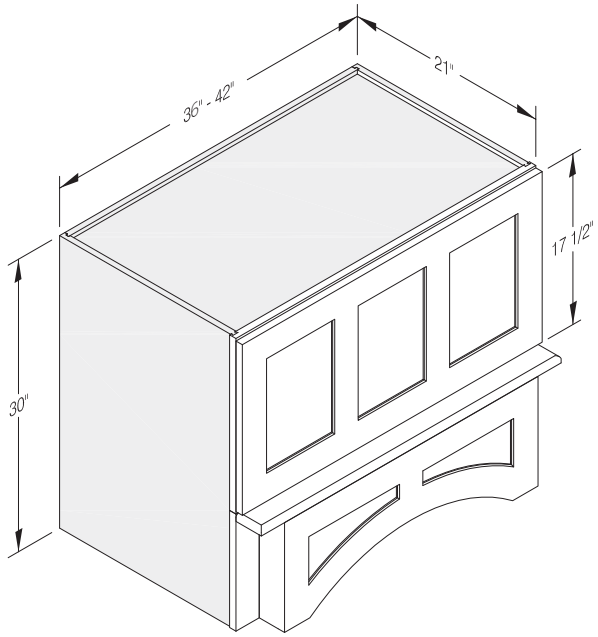

Wood Range Hood - Chimney Style

Cabinet Code	Dimensions
NRH36	36"W x 38"H x 22 ¾"D

Includes:
- One (1) wood range hood

Inside usable space to cut for vent is approximatly 35"W x 21 ¾"D. Cut-out can be modified.

Largest insert approximate 30"L x 19¼"W

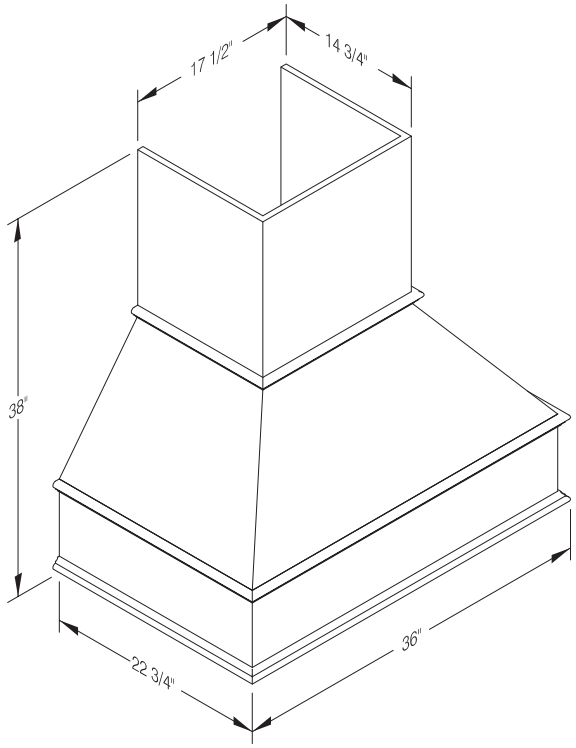



DECORATIVE & GLASS DOORS

Decorative & Glass Doors

Decorative Door - Wall

Cabinet Code	Dimensions
DDW30	11 ½”W x 29 ½”H x ¾”D
DDW36	11 ½”W x 35 ½”H x ¾”D
DDW42	11 ½”W x 41 ½”H x ¾”D

Includes:
- One (1) decorative door.

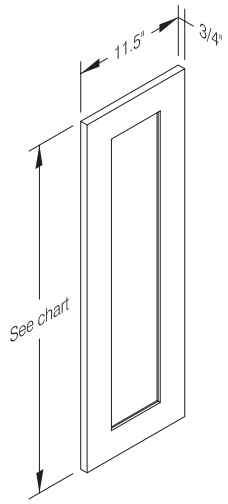

Decorative Door - Base

Cabinet Code	Dimensions
DDB30	23 ½”W x 29 ½”H x ¾”D

Includes:
- One (1) decorative door.

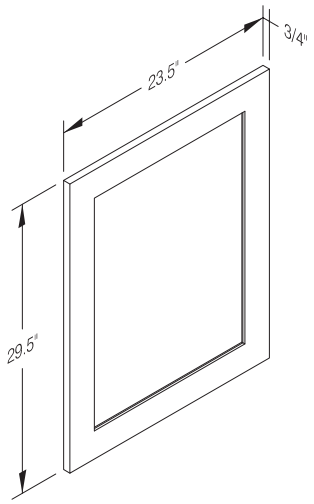

Top Pantry Door - 18"W

Cabinet Code	Dimensions
WP1884TDD	17 ½"W x 29 ½"H x ¾"D
WP1890TDD	17 ½"W x 35 ½"H x ¾"D
WP1896TDD	17 ½"W x 41 ½"H x ¾"D

Includes:
- One (1) decorative door.

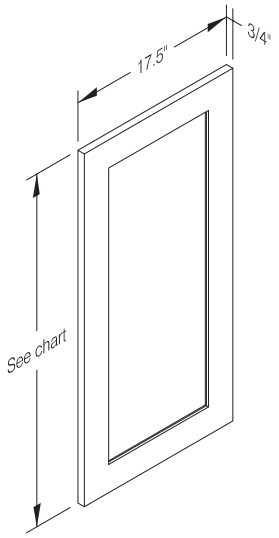

Top Pantry Door - 24"W

Cabinet Code	Dimensions
WP2484TDD	11 ¾"W x 29 ½"H x ¾"D
WP2490TDD	11 ¾"W x 35 ½"H x ¾"D
WP2496TDD	11 ¾"W x 41 ½"H x ¾"D

Includes:
- One (1) decorative door.

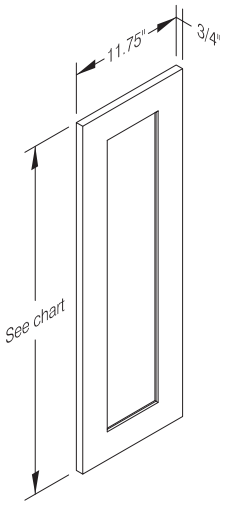

Decorative & Glass Doors

Top Pantry Door - 30"W

Cabinet Code	Dimensions
WP3084TDD	14 ¾"W x 29 ½"H x ¾"D
WP3090TDD	14 ¾"W x 35 ½"H x ¾"D
WP3096TDD	14 ¾"W x 41 ½"H x ¾"D

Includes:

- One (1) decorative door.

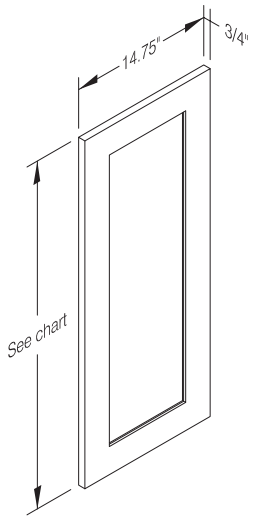

Base Pantry Decorative Doors

Cabinet Code	Dimensions
WP18XXBDD	17 ½"W x 49 3/16"H x ¾"D
WP24XXBDD	11 ¾"W x 49 3/16"H x ¾"D
WP30XXBDD	14 ¾"W x 49 3/16"H x ¾"D

Includes:

- One (1) decorative door.

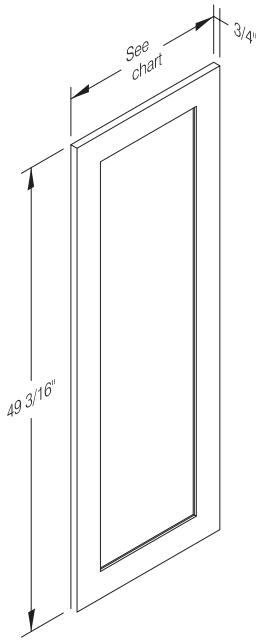

Decorative & Glass Doors

Glass Doors - 12"H

Cabinet Code	Dimensions
W1212GD	11 ½"W x 11 17/32"H x ¾"D
W1512GD	14 ½"W x 11 17/32"H x ¾"D
W1812GD	17 ½"W x 11 17/32"H x ¾"D
W2112GD	20 ½"W x 11 17/32"H x ¾"D
W2412GD	11 ¾"W x 11 17/32"H x ¾"D
W2712GD	13 ¼"W x 11 17/32"H x ¾"D
W3012GD	14 ¾"W x 11 17/32"H x ¾"D
W3312GD	16 ¼"W x 11 17/32"H x ¾"D
W3612GD	17 ¾"W x 11 17/32"H x ¾"D

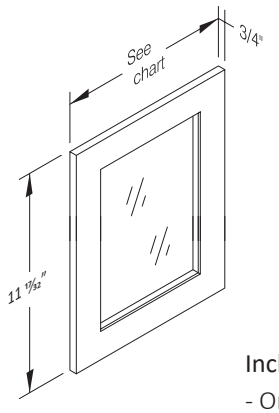

Includes:
- One (1) decorative door. (Glass installed)

Glass Doors - 30"H

Cabinet Code	Dimensions
W1230GD	11 ½"W x 29 ½"H x ¾"D
W1530GD	14 ½"W x 29 ½"H x ¾"D
W1830GD	17 ½"W x 29 ½"H x ¾"D
W2130GD	20 ½"W x 29 ½"H x ¾"D
W2430GD	11 ¾"W x 29 ½"H x ¾"D
W2730GD	13 ¼"W x 29 ½"H x ¾"D
W3030GD	14 ¾"W x 29 ½"H x ¾"D
W3330GD	16 ¼"W x 29 ½"H x ¾"D
W3630GD	17 ¾"W x 29 ½"H x ¾"D
WLS2430GD	11 ¾"W x 29 ½"H x ¾"D

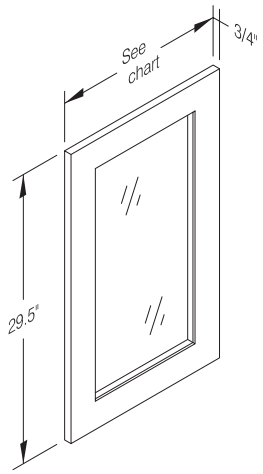

Includes:
- One (1) decorative door. (Glass installed)

Glass Door - 36"H

Cabinet Code	Dimensions
W1236GD	11 ½"W x 35 ½"H x ¾"D
W1536GD	14 ½"W x 35 ½"H x ¾"D
W1836GD	17 ½"W x 35 ½"H x ¾"D
W2136GD	20 ½"W x 35 ½"H x ¾"D
W2436GD	11 ¾"W x 35 ½"H x ¾"D
W2736GD	13 ¼"W x 35 ½"H x ¾"D
W3036GD	14 ¾"W x 35 ½"H x ¾"D
W3336GD	16 ¼"W x 35 ½"H x ¾"D
W3636GD	17 ¾"W x 35 ½"H x ¾"D
WLS2436GD	11 ¾"W x 35 ½"H x ¾"D

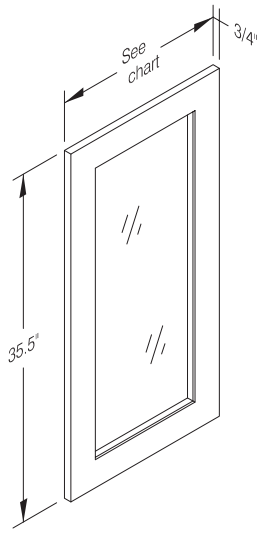

Includes:
- One (1) decorative door. (Glass installed)

Decorative & Glass Doors

Glass Door - 42"H

Cabinet Code	Dimensions
W1242GD	11 ½"W x 41 ½"H x ¾"D
W1542GD	14 ½"W x 41 ½"H x ¾"D
W1842GD	17 ½"W x 41 ½"H x ¾"D
W2142GD	20 ½"W x 41 ½"H x ¾"D
W2442GD	11 ¾"W x 41 ½"H x ¾"D
W2742GD	13 ¼"W x 41 ½"H x ¾"D
W3042GD	14 ¾"W x 41 ½"H x ¾"D
W3342GD	16 ¼"W x 41 ½"H x ¾"D
W3642GD	17 ¾"W x 41 ½"H x ¾"D
WLS2442GD	11 ¾"W x 41 ½"H x ¾"D

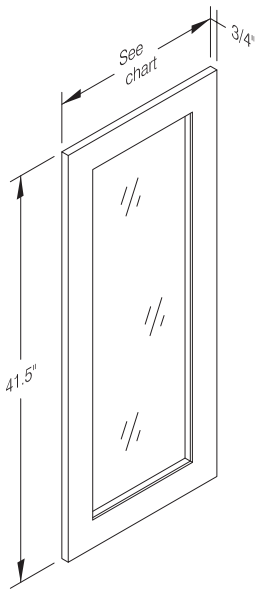

Includes: One (1) decorative door.
(Glass installed)

Wall Diagonal Corner Cabinet Glass Doors

Cabinet Code	Dimensions
WDC2412GD	15 ¼"W x 11 ½"H x ¾"D
WDC2430GD	15 ¼"W x 29 ½"H x ¾"D
WDC2436GD	15 ¼"W x 35 ½"H x ¾"D
WDC2442GD	15 ¼"W x 41 ½"H x ¾"D

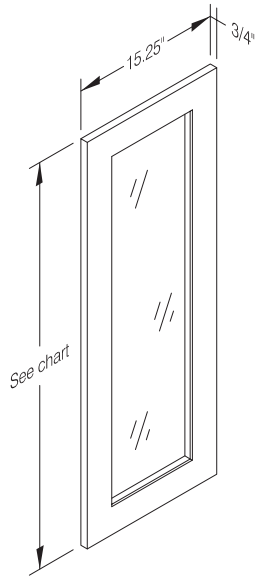

Includes:
- One (1) decorative door.
(Glass installed)

Wall End Cabinet Glass Doors

Cabinet Code	Dimensions
WEC1230GD	15 ¼"W x 29 ½"H x ¾"D
WEC1236GD	15 ¼"W x 35 ½"H x ¾"D
WEC1242GD	15 ¼"W x 41 ½"H x ¾"D

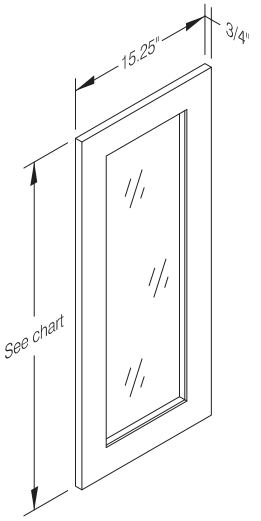

Includes:
- One (1) decorative door.
(Glass installed)



VALANCES, CORBELS & POST

Curved Valance

Cabinet Code	Dimensions
VAL36	36”W x 6”H x 3/4”D
VAL45	45”W x 6”H x 3/4”D
VAL54	54”W x 6”H x 3/4”D
VAL65	65”W x 6”H x 3/4”D

Includes:
- One (1) curved valance.

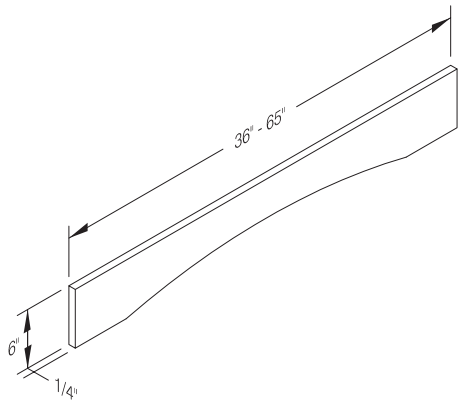

Corbels

Cabinet Code	Dimensions
CB9	4 ¾”W x 9 ½”H x 5 1⁄16”D

Includes:
- One (1) corbel.

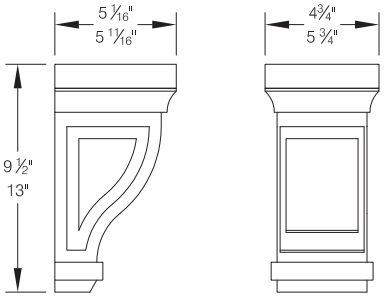

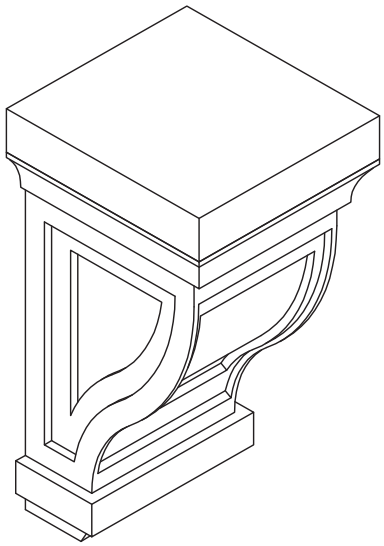

Shaker Style Post

Cabinet Code	Dimensions
SSP4X36	4 ½”W x 36”H x 4 ½”D

Includes:
- One (1) shaker style post.

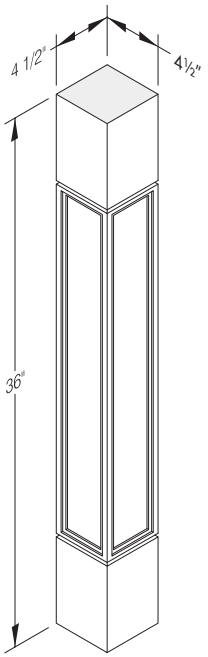

Classic Post

Cabinet Code	Dimensions
SP4X36	4 ½”W x 36”H x 4 ½”D

Includes:
- One (1) classic style post.

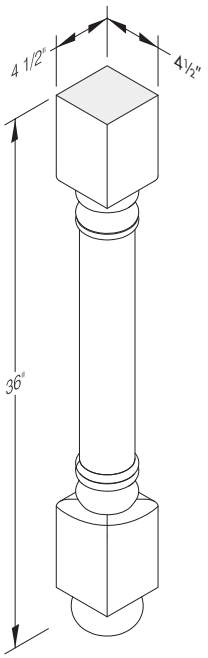



Warranty

5 Year Cabinet Warranty

Cabinet Depot warrants to the original consumer purchaser that cabinetry, door hinges, and drawer glides will be free from defects in material and workmanship under normal use and service for a period of Five (5) years from pur-chase date (Proof of Purchase is required). This warranty is not transferable and only applicable to product used for residential purposes. Representatives of this cabinet line do not have the authority to change or enlarge this warranty.

This warranty does not cover normal wear and tear, damage or defects caused by accidents, misuse, abuse, or lack of necessary maintenance; nor does it cover alteration, modification, improper installation, improper handling / storage, environmental conditions, nor any labor expenses.

Vendor, at our option, may elect to repair or replace with a functionally equivalent product any product covered by this warranty. Some replacement parts are subject to availability and may differ from original parts received. Return of defective product may be required for a replacement to be issued. Repair parts or replacement parts are at the expense of the vendor, but customer shall bear all other expenses. These expenses may include, but are not limited to, cost of removal and re-installation of product, labor expenses, etc.

Just as no two trees are alike, no two pieces of wood are alike. The variation in color and grain pattern in wood adds to its natural beauty and is not considered an imperfection. Environmental factors, including but not limited to artificial / natural light, moisture, cleaners, smoke, etc., may cause the darkening or mellowing of a cabinet over time. This is a natural process and can be expected. This warranty does not cover the natural aging or darkening / mellowing of wood color, the inherent growth characteristics of, or variation in wood.

Some of the cabinet lines feature a glazed finish that accentuates the door and drawer front profiles. This glaze is hand-applied over a stain or paint and may, due to the nature of application, consist of random drips, runs, etc. As glazing is a hand-applied process there will be variations in color and appearance from door to door and cabinet to cabinet. This is not considered a defect and is considered normal with hand applied finishes.

It is the nature of wood to expand and contract to varying degrees depending on climate conditions. As a result, cabinet lines with painted surfaces may show fractures in the paint at joints. This is normal and is not considered a defect.

This warranty is valid only in the United States of America and is not transferable. All implied warranties are limited in duration to the shorter of the period provided by law or the period of this warranty. To the extent permitted by law, this warranty excludes special, incidental, or consequential damages. Some states do not allow the exclusion or limitations of incidental or consequential damages or limitations on how long an implied warranty lasts, so the above limitations or exclusions may not apply to you. This warranty gives you specific legal rights; you may have other rights which vary from state to state.

To exercise this warranty, please contact the supplier from whom you purchased the product. Report, in writing, all defects claimed and include proof of purchase documentation.

Cabinet depot Product Skus

BASE CABINETS		SW	SG	SC	SN	SBW	SBC	SM	SD	SSD	SSO
		Shaker White	Shakler Grey	Shaker Caramel	Shaker Naval	Sturbridge White	Sturbridge Caramel	Shaker Moss	Shaker Dove	Slim Shaker Dove	Slim Shaker Oak
ITEM CODE	DESCRIPTION	LIST PRICE									
TB09	BASE CABINET 9" WIDE 1 DOOR 1 SHELF	$ 251.41	$ 251.41	$ 269.01	$ 269.01	$ 251.41	$ 269.01	$ 269.01	$ 251.41	$ 251.41	$ 326.84
SP09	SPICE PULL BASE CABINET 1 FULL HEIGHT DOOR (3-LEVEL)	$ 351.08	$ 351.08	$ 375.65	$ 375.65	$ 351.08	$ 375.65	$ 375.65	$ 351.08	$ 351.08	$ 456.40
B12	BASE CABINET 1 DRAWER 1 DOOR 1 SHELF	$ 326.43	$ 326.43	$ 349.28	$ 349.28	$ 326.43	$ 349.28	$ 349.28	$ 326.43	$ 326.43	$ 424.36
B12FH	BASE CABINET 1 FULL HEIGHT DOOR	$ 312.05	$ 312.05	$ 333.89	$ 333.89	$ 312.05	$ 333.89	$ 333.89	$ 312.05	$ 312.05	$ 405.67
B15	BASE CABINET 1 DRAWER 1 DOOR 1 SHELF	$ 358.81	$ 358.81	$ 383.92	$ 383.92	$ 358.81	$ 383.92	$ 383.92	$ 358.81	$ 358.81	$ 466.45
B15FH	BASE CABINET 1 FULL HEIGHT DOOR	$ 337.41	$ 337.41	$ 361.03	N/A	$ 337.41	$ 361.03	$ 361.03	$ 337.41	$ 337.41	$ 438.63
BWB15	BASE CABINET 1 DRAWER 1 DOOR 1 SHELF WITH SINGLE WASTE BIN	$ 883.81	$ 883.81	$ 945.67	$ 945.67	$ 883.81	$ 945.67	$ 945.67	$ 883.81	$ 883.81	$ 1,148.95
B18	BASE CABINET 1 DRAWER 1 DOOR 1 SHELF	$ 390.42	$ 390.42	$ 417.75	$ 417.75	$ 390.42	$ 417.75	$ 417.75	$ 390.42	$ 390.42	$ 507.55
B18FH	BASE CABINET 1 FULL HEIGHT DOOR	$ 364.51	$ 364.51	$ 390.03	N/A	$ 364.51	$ 390.03	$ 390.03	$ 364.51	$ 364.51	$ 473.86
BWB18	BASE CABINET 1 DRAWER 1 DOOR 1 SHELF WITH DOUBLE WASTE BIN	$ 915.42	$ 915.42	$ 979.50	$ 979.50	$ 915.42	$ 979.50	$ 979.50	$ 915.42	$ 915.42	$ 1,190.05
B21	BASE CABINET 1 DRAWER 1 DOOR 1 SHELF	$ 427.24	$ 427.24	$ 457.14	$ 457.14	$ 427.24	$ 457.14	$ 457.14	$ 427.24	$ 427.24	$ 555.41
B21FH	BASE CABINET 1 FULL HEIGHT DOOR	$ 405.87	$ 405.87	$ 434.29	N/A	$ 405.87	$ 434.29	$ 434.29	$ 405.87	$ 405.87	$ 527.64
BWB21	BASE CABINET 1 DRAWER 1 DOOR 1 SHELF WITH DOUBLE WASTE BIN	$ 978.15	$ 978.15	$ 1,046.62	$ 1,046.62	$ 978.15	$ 1,046.62	$ 1,046.62	$ 978.15	$ 978.15	$ 1,271.60
B24	BASE CABINET 1 DRAWER 2 DOOR 1 SHELF	$ 458.22	$ 458.22	$ 490.29	$ 490.29	$ 458.22	$ 490.29	$ 490.29	$ 458.22	$ 458.22	$ 595.69
B24FH	BASE CABINET 2 FULL HEIGHT DOORS	$ 425.81	$ 425.81	$ 455.62	$ 455.62	$ 425.81	$ 455.62	$ 455.62	$ 425.81	$ 425.81	$ 553.55
B27	BASE CABINET 1 DRAWER 2 DOOR 1 SHELF	$ 484.58	$ 484.58	$ 518.50	$ 518.50	$ 484.58	$ 518.50	$ 518.50	$ 484.58	$ 484.58	$ 629.95
B27FH	BASE CABINET 2 FULL HEIGHT DOOR	$ 460.35	$ 460.35	$ 492.57	N/A	$ 460.35	$ 492.57	$ 492.57	$ 460.35	$ 460.35	$ 598.45
B30	BASE CABINET 2 DRAWER 2 DOOR 1 SHELF	$ 553.08	$ 553.08	$ 591.80	$ 591.80	$ 553.08	$ 591.80	$ 591.80	$ 553.08	$ 553.08	$ 719.00
B30FH	BASE CABINET 2 FULL HEIGHT DOORS	$ 521.53	$ 521.53	$ 558.04	$ 558.04	$ 521.53	$ 558.04	$ 558.04	$ 521.53	$ 521.53	$ 677.99
B33	BASE CABINET 2 DRAWER 2 DOOR 1 SHELF	$ 616.37	$ 616.37	$ 659.51	**N/A**	$ 616.37	$ 659.51	$ 659.51	$ 616.37	$ 616.37	$ 801.28
B33FH	BASE CABINET 2 FULL HEIGHT DOORS	$ 585.55	$ 585.55	$ 626.54	**N/A**	$ 585.55	$ 626.54	$ 626.54	$ 585.55	$ 585.55	$ 761.21
B36	BASE CABINET 2 DRAWER 2 DOOR 1 SHELF	$ 648.87	$ 648.87	$ 694.29	$ 694.29	$ 648.87	$ 694.29	$ 694.29	$ 648.87	$ 648.87	$ 843.53
B36FH	BASE CABINET 2 FULL HEIGHT DOORS	$ 616.43	$ 616.43	$ 659.58	N/A	$ 616.43	$ 659.58	$ 659.58	$ 616.43	$ 616.43	$ 801.35
B39	BASE CABINET 2 DRAWER 2 DOOR 1 SHELF	$ 699.30	N/A	N/A	N/A	N/A	N/A	N/A	N/A	N/A	N/A
B42	BASE CABINET 2 DRAWER 2 DOOR 1 SHELF	$ 725.47	$ 725.47	$ 776.26	N/A	$ 725.47	$ 776.26	$ 776.26	$ 725.47	$ 725.47	$ 943.11
B42FH	BASE CABINET 2 FULL HEIGHT DOORS	$ 689.20	$ 689.20	$ 737.44	N/A	$ 689.20	$ 737.44	$ 737.44	$ 689.20	$ 689.20	$ 895.96
DB12	DRAWER BASE 3 DRAWER (2 BIG 1 SMALL)	$ 511.10	$ 511.10	$ 546.88	N/A	$ 511.10	$ 546.88	$ 546.88	$ 511.10	$ 511.10	$ 664.43
DB15	DRAWER BASE 3 DRAWER (2 BIG 1 SMALL)	$ 555.12	$ 555.12	$ 593.97	$ 593.97	$ 555.12	$ 593.97	$ 593.97	$ 555.12	$ 555.12	$ 721.65
DB18	DRAWER BASE 3 DRAWER (2 BIG 1 SMALL)	$ 590.55	$ 590.55	$ 631.89	$ 631.89	$ 590.55	$ 631.89	$ 631.89	$ 590.55	$ 590.55	$ 767.72
DB21	DRAWER BASE 3 DRAWER (2 BIG 1 SMALL)	$ 635.89	$ 635.89	$ 680.40	N/A	$ 635.89	$ 680.40	$ 680.40	$ 635.89	$ 635.89	$ 826.66
DB24	DRAWER BASE 3 DRAWER (2 BIG 1 SMALL)	$ 686.36	$ 686.36	$ 734.40	$ 734.40	$ 686.36	$ 734.40	$ 734.40	$ 686.36	$ 686.36	$ 892.27

CabTec Product Skus

BASE CABINETS		SW	SG	SC	SN	SBW	SBC	SM	SD	SSD	SSO
		Shaker White	Shakler Grey	Shaker Caramel	Shaker Naval	Sturbridge White	Sturbridge Caramel	Shaker Moss	Shaker Dove	Slim Shaker Dove	Slim Shaker Oak
ITEM CODE	DESCRIPTION	LIST PRICE									
2DB24	DRAWER BASE 2 DRAWER	$ 668.86	$ 668.86	$ 715.68	$ 715.68	$ 668.86	$ 715.68	$ 715.68	$ 668.86	$ 668.86	$ 869.52
DB27	DRAWER BASE 3 DRAWER (2 BIG 1 SMALL)	$ 740.45	N/A	N/A	N/A	N/A	N/A	N/A	N/A	N/A	N/A
DB30	DRAWER BASE 3 DRAWER (2 BIG 1 SMALL)	$ 790.88	$ 790.88	$ 846.24	$ 846.24	$ 790.88	$ 846.24	$ 846.24	$ 790.88	$ 790.88	$ 1,028.14
2DB30	DRAWER BASE 2 DRAWER	$ 758.41	$ 758.41	$ 811.50	$ 811.50	$ 758.41	$ 811.50	$ 811.50	$ 758.41	$ 758.41	$ 985.93
DB33	DRAWER BASE 3 DRAWER (2 BIG 1 SMALL)	$ 836.88	$ 836.88	$ 895.46	N/A	$ 836.88	$ 895.46	$ 895.46	$ 836.88	$ 836.88	$ 1,087.94
DB36	DRAWER BASE 3 DRAWER (2 BIG 1 SMALL)	$ 882.42	$ 882.42	$ 944.19	$ 944.19	$ 882.42	$ 944.19	$ 944.19	$ 882.42	$ 882.42	$ 1,147.15
BER33	EASY REACH BASE CABINET 1 BI-FOLD DOOR 1 SHELF	$ 644.27	$ 644.27	$ 689.37	N/A	$ 644.27	$ 689.37	$ 689.37	$ 644.27	$ 644.27	$ 837.55
BER36	EASY REACH BASE CABINET 1 BI-FOLD DOOR 1 SHELF	$ 696.85	$ 696.85	$ 745.63	$ 745.63	$ 696.85	$ 745.63	$ 745.63	$ 696.85	$ 696.85	$ 905.91
LS33	LAZY SUSAN BASE CABINET 1 BI-FOLD DOOR 2 PLATTER	$ 836.62	$ 836.62	$ 895.18	N/A	$ 836.62	$ 895.18	$ 895.18	$ 836.62	$ 836.62	$ 1,087.60
LS36	LAZY SUSAN BASE CABINET 1 BI-FOLD DOOR 2 PLATTER	$ 898.66	$ 898.66	$ 961.56	$ 961.56	$ 898.66	$ 961.56	$ 961.56	$ 898.66	$ 898.66	$ 1,168.25
BBC39	BLIND BASE CORNER CABINET 1 DOOR 1 DRAWER 1 SHELF	$ 553.32	$ 553.32	$ 592.06	$ 592.06	$ 553.32	$ 592.06	$ 592.06	$ 553.32	$ 553.32	$ 719.32
BBC42	BLIND BASE CORNER CABINET 1 DOOR 1 DRAWER 1 SHELF	$ 598.12	$ 598.12	$ 639.99	N/A	$ 598.12	$ 639.99	$ 639.99	$ 598.12	$ 598.12	$ 777.55
SB24	SINK BASE 2 DOOR 2 DUMMY DRAWER W/TIPOUT 1 SHELF	$ 374.21	$ 374.21	$ 400.40	$ 400.40	$ 374.21	$ 400.40	$ 400.40	$ 374.21	$ 374.21	$ 486.47
SB27	SINK BASE 2 DOOR 2 DUMMY DRAWER W/TIPOUT 1 SHELF	$ 409.98	$ 409.98	$ 438.68	$ 438.68	$ 409.98	$ 438.68	$ 438.68	$ 409.98	$ 409.98	$ 532.97
SB30	SINK BASE 2 DOOR 2 DUMMY DRAWER W/TIPOUT 1 SHELF	$ 419.70	$ 419.70	$ 449.08	$ 449.08	$ 419.70	$ 449.08	$ 449.08	$ 419.70	$ 419.70	$ 545.61
SB33	SINK BASE 2 DOOR 2 DUMMY DRAWER W/TIPOUT 1 SHELF	$ 439.91	$ 439.91	$ 470.70	$ 470.70	$ 439.91	$ 470.70	$ 470.70	$ 439.91	$ 439.91	$ 571.88
SB36	SINK BASE 2 DOOR 2 DUMMY DRAWER W/TIPOUT 1 SHELF	$ 468.29	$ 468.29	$ 501.07	$ 501.07	$ 468.29	$ 501.07	$ 501.07	$ 468.29	$ 468.29	$ 608.78
CSB36	CORNER SINK BASE 1 DOOR 1 DUMMY DRAWER 1 SHELF	$ 527.73	$ 527.73	$ 564.67	$ 564.67	$ 527.73	$ 564.67	$ 564.67	$ 527.73	$ 527.73	$ 686.04
FSB36	FARM SINK BASE CABINET	$ 604.52	$ 604.52	$ 646.84	$ 646.84	$ 604.52	$ 646.84	$ 646.84	$ 604.52	$ 604.52	$ 785.87
MDB30	MICROWAVE DRAWER BASE 1 DRAWER 30"WIDE	$ 590.15	$ 590.15	$ 631.46	$ 631.46	$ 590.15	$ 631.46	$ 631.46	$ 590.15	$ 590.15	$ 767.20
BEC24	BASE END ANGLE CABINET 2 DOOR 1 SHELF	$ 574.42	N/A	N/A	N/A	N/A	N/A	N/A	N/A	N/A	N/A
BTR12	Right End 12" Base Transitional Cabinet 1 full height door	$ 299.57	N/A	$ 320.54	N/A	$ 299.57	$ 320.54	$ 320.54	$ 299.57	$ 299.57	$ 389.44
BTL12	Left End 12" Base Transitional Cabinet 1 full height door	$ 299.57	N/A	$ 320.54	N/A	$ 299.57	$ 320.54	$ 320.54	$ 299.57	$ 299.57	$ 389.44

Cabinet depot Product Skus

ADA BASE CABINETS		SW	SG	SC	SN	SBW	SBC	SM	SD	SSD	SSO
		Shaker White	Shakler Grey	Shaker Caramel	Shaker Naval	Sturbridge White	Sturbridge Caramel	Shaker Moss	Shaker Dove	Slim Shaker Dove	Slim Shaker Oak
ITEM CODE	DESCRIPTION	LIST PRICE									
TB09ADA	BASE CABINET 9" WIDE 1 DOOR 1 SHELF	$ 276.55	N/A	$ 295.91	N/A	N/A	N/A	N/A	N/A	N/A	N/A
B12ADA	BASE CABINET 1 DRAWER 1 DOOR 1 SHELF	$ 359.07	N/A	$ 384.21	N/A	N/A	N/A	N/A	N/A	N/A	N/A
B15ADA	BASE CABINET 1 DRAWER 1 DOOR 1 SHELF	$ 394.69	N/A	$ 422.32	N/A	N/A	N/A	N/A	N/A	N/A	N/A
B18ADA	BASE CABINET 1 DRAWER 1 DOOR 1 SHELF	$ 429.47	N/A	$ 459.53	N/A	N/A	N/A	N/A	N/A	N/A	N/A
B21ADA	BASE CABINET 1 DRAWER 1 DOOR 1 SHELF	$ 469.96	N/A	$ 502.86	N/A	N/A	N/A	N/A	N/A	N/A	N/A
B24ADA	BASE CABINET 1 DRAWER 2 DOOR 1 SHELF	$ 504.04	N/A	$ 539.32	N/A	N/A	N/A	N/A	N/A	N/A	N/A
B27ADA	BASE CABINET 1 DRAWER 2 DOOR 1 SHELF	$ 533.04	N/A	$ 570.35	N/A	N/A	N/A	N/A	N/A	N/A	N/A
B30ADA	BASE CABINET 2 DRAWER 2 DOOR 1 SHELF	$ 608.39	N/A	$ 650.98	N/A	N/A	N/A	N/A	N/A	N/A	N/A
B36ADA	BASE CABINET 2 DRAWER 2 DOOR 1 SHELF	$ 713.76	N/A	$ 763.72	N/A	N/A	N/A	N/A	N/A	N/A	N/A
DB12ADA	DRAWER BASE 3 DRAWER (2 BIG 1 SMALL)	$ 562.21	N/A	$ 601.56	N/A	N/A	N/A	N/A	N/A	N/A	N/A
DB15ADA	DRAWER BASE 3 DRAWER (2 BIG 1 SMALL)	$ 610.63	N/A	$ 653.37	N/A	N/A	N/A	N/A	N/A	N/A	N/A
DB18ADA	DRAWER BASE 3 DRAWER (2 BIG 1 SMALL)	$ 649.61	N/A	$ 695.08	N/A	N/A	N/A	N/A	N/A	N/A	N/A
SBR30ADA	REMOVABLE SINK BASE 2 DOOR 1 DUMMY DRAWER	$ 461.67	N/A	$ 493.98	N/A	N/A	N/A	N/A	N/A	N/A	N/A
SBR33ADA	REMOVABLE SINK BASE 2 DOOR 1 DUMMY DRAWER	$ 483.90	N/A	$ 517.77	N/A	N/A	N/A	N/A	N/A	N/A	N/A
SBR36ADA	REMOVABLE SINK BASE 2 DOOR 1 DUMMY DRAWER	$ 515.12	N/A	$ 551.18	N/A	N/A	N/A	N/A	N/A	N/A	N/A
LS36ADA	LAZY SUSAN BASE CABINET 1 BI-FOLD DOOR 2 PLATTER	$ 988.52	N/A	$ 1,057.72	N/A	N/A	N/A	N/A	N/A	N/A	N/A
BBC39ADA	BLIND BASE CORNER CABINET 1 DOOR 1 DRAWER 1 SHELF	$ 608.66	N/A	$ 651.26	N/A	N/A	N/A	N/A	N/A	N/A	N/A

CABINET DEPOT Product Skus

WALL CABINETS		SW	SG	SC	SN	SBW	SBC	SM	SD	SSD	SSO
		Shaker White	Shakler Grey	Shaker Caramel	Shaker Naval	Sturbridge White	Sturbridge Caramel	Shaker Moss	Shaker Dove	Slim Shaker Dove	Slim Shaker Oak
ITEM CODE	DESCRIPTION	LIST PRICE									
W1212	WALL CABINET SINGLE DOOR 12" H	$ 105.25	$ 105.25	$ 112.62	N/A	$ 105.25	$ 112.62	$ 112.62	$ 105.25	$ 105.25	$ 136.83
W1512	WALL CABINET SINGLE DOOR 12" H	$ 114.15	$ 114.15	$ 122.14	N/A	$ 114.15	$ 122.14	$ 122.14	$ 114.15	$ 114.15	$ 148.39
W1812	WALL CABINET SINGLE DOOR 12" H	$ 128.49	$ 128.49	$ 137.49	N/A	$ 128.49	$ 137.49	$ 137.49	$ 128.49	$ 128.49	$ 167.04
W2112	WALL CABINET SINGLE DOOR 12" H	$ 136.04	$ 136.04	$ 145.56	N/A	$ 136.04	$ 145.56	$ 145.56	$ 136.04	$ 136.04	$ 176.85
W2412	WALL CABINET DOUBLE DOOR 12"H	$ 166.53	$ 166.53	$ 178.19	N/A	$ 166.53	$ 178.19	$ 178.19	$ 166.53	$ 166.53	$ 216.49
W2712	WALL CABINET DOUBLE DOOR 12"H	$ 180.19	$ 180.19	$ 192.81	N/A	$ 180.19	$ 192.81	$ 192.81	$ 180.19	$ 180.19	$ 234.25
W3012	WALL CABINET DOUBLE DOOR 12"H	$ 212.00	$ 212.00	$ 226.84	N/A	$ 212.00	$ 226.84	$ 226.84	$ 212.00	$ 212.00	$ 275.60
W3312	WALL CABINET DOUBLE DOOR 12"H	$ 222.47	$ 222.47	$ 238.05	N/A	$ 222.47	$ 238.05	$ 238.05	$ 222.47	$ 222.47	$ 289.22
W3612	WALL CABINET DOUBLE DOOR 12"H	$ 233.02	$ 233.02	$ 249.34	N/A	$ 233.02	$ 249.34	$ 249.34	$ 233.02	$ 233.02	$ 302.93
W3015	WALL BRIDGE CABINET 2 DOOR 15"H	$ 225.93	$ 225.93	$ 241.74	N/A	$ 225.93	$ 241.74	$ 241.74	$ 225.93	$ 225.93	$ 293.71
W3315	WALL BRIDGE CABINET 2 DOOR 15"H	$ 238.71	$ 238.71	$ 255.42	N/A	$ 238.71	$ 255.42	$ 255.42	$ 238.71	$ 238.71	$ 310.32
W3615	WALL BRIDGE CABINET 2 DOOR 15"H	$ 250.10	$ 250.10	$ 267.61	N/A	$ 250.10	$ 267.61	$ 267.61	$ 250.10	$ 250.10	$ 325.13
W3018	WALL BRIDGE CABINET 2 DOOR 1 SHELF 18"H	$ 277.55	$ 277.55	$ 296.98	N/A	$ 277.55	$ 296.98	$ 296.98	$ 277.55	$ 277.55	$ 360.82
W3318	WALL BRIDGE CABINET 2 DOOR 1 SHELF 18"H	$ 294.41	$ 294.41	$ 315.02	N/A	$ 294.41	$ 315.02	$ 315.02	$ 294.41	$ 294.41	$ 382.74
W3618	WALL BRIDGE CABINET 2 DOOR 1 SHELF 18"H	$ 311.43	$ 311.43	$ 333.23	N/A	$ 311.43	$ 333.23	$ 333.23	$ 311.43	$ 311.43	$ 404.85
W3021	WALL BRIDGE CABINET 2 DOOR 1 SHELF 21"H	$ 300.40	$ 300.40	$ 321.43	N/A	$ 300.40	$ 321.43	$ 321.43	$ 300.40	$ 300.40	$ 390.52
W3321	WALL BRIDGE CABINET 2 DOOR 1 SHELF 21"H	$ 321.48	$ 321.48	$ 343.99	N/A	$ 321.48	$ 343.99	$ 343.99	$ 321.48	$ 321.48	$ 417.93
W3621	WALL BRIDGE CABINET 2 DOOR 1 SHELF 21"H	$ 340.51	$ 340.51	$ 364.34	N/A	$ 340.51	$ 364.34	$ 364.34	$ 340.51	$ 340.51	$ 442.66
W2424	WALL BRIDGE CABINET 2 DOOR 1 SHELF 24"H	$ 284.98	N/A	N/A	N/A	N/A	N/A	N/A	N/A	N/A	N/A
W3024	WALL BRIDGE CABINET 2 DOOR 1 SHELF 24"H	$ 325.84	$ 325.84	$ 348.64	N/A	$ 325.84	$ 348.64	$ 348.64	$ 325.84	$ 325.84	$ 423.59
W3324	WALL BRIDGE CABINET 2 DOOR 1 SHELF 24"H	$ 347.80	$ 347.80	$ 372.15	N/A	$ 347.80	$ 372.15	$ 372.15	$ 347.80	$ 347.80	$ 452.15
W3624	WALL BRIDGE CABINET 2 DOOR 1 SHELF 24"H	$ 366.41	$ 366.41	$ 392.06	N/A	$ 366.41	$ 392.06	$ 392.06	$ 366.41	$ 366.41	$ 476.33

Cabinet depot Product Skus

WALL CABINETS		SW	SG	SC	SN	SBW	SBC	SM	SD	SSD	SSO
		Shaker White	Shakler Grey	Shaker Caramel	Shaker Naval	Sturbridge White	Sturbridge Caramel	Shaker Moss	Shaker Dove	Slim Shaker Dove	Slim Shaker Oak
ITEM CODE	DESCRIPTION	LIST PRICE									
W0930	WALL CABINET 1 DOOR 2 SHELF	$ 173.79	$ 173.79	$ 185.95	N/A	$ 173.79	$ 185.95	$ 185.95	$ 173.79	$ 173.79	$ 225.92
W1230	WALL CABINET 1 DOOR 2 SHELF	$ 198.42	$ 198.42	$ 212.31	$ 212.31	$ 198.42	$ 212.31	$ 212.31	$ 198.42	$ 198.42	$ 257.95
W1530	WALL CABINET 1 DOOR 2 SHELF	$ 220.84	$ 220.84	$ 236.30	N/A	$ 220.84	$ 236.30	$ 236.30	$ 220.84	$ 220.84	$ 287.10
W1830	WALL CABINET 1 DOOR 2 SHELF	$ 247.68	$ 247.68	$ 265.02	N/A	$ 247.68	$ 265.02	$ 265.02	$ 247.68	$ 247.68	$ 321.98
W2130	WALL CABINET 1 DOOR 2 SHELF	$ 298.91	$ 298.91	$ 319.84	N/A	$ 298.91	$ 319.84	$ 319.84	$ 298.91	$ 298.91	$ 388.59
W2430	WALL CABINET 2 DOOR 2 SHELF	$ 321.68	$ 321.68	$ 344.19	$ 344.19	$ 321.68	$ 344.19	$ 344.19	$ 321.68	$ 321.68	$ 418.18
W2730	WALL CABINET 2 DOOR 2 SHELF	$ 345.82	$ 345.82	$ 370.03	N/A	$ 345.82	$ 370.03	$ 370.03	$ 345.82	$ 345.82	$ 449.56
W3030	WALL CABINET 2 DOOR 2 SHELF	$ 394.81	$ 394.81	$ 422.45	$ 422.45	$ 394.81	$ 422.45	$ 422.45	$ 394.81	$ 394.81	$ 513.26
W3330	WALL CABINET 2 DOOR 2 SHELF	$ 392.72	$ 392.72	$ 420.21	N/A	$ 392.72	$ 420.21	$ 420.21	$ 392.72	$ 392.72	$ 510.54
W3630	WALL CABINET 2 DOOR 2 SHELF	$ 433.73	$ 433.73	$ 464.09	N/A	$ 433.73	$ 464.09	$ 464.09	$ 433.73	$ 433.73	$ 563.85
W4230	WALL CABINET 2 DOOR 2 SHELF	$ 501.02	$ 501.02	$ 536.09	N/A	$ 501.02	$ 536.09	$ 536.09	$ 501.02	$ 501.02	$ 651.32
W0936	WALL CABINET 1 DOOR 2 SHELF	$ 198.64	$ 198.64	$ 212.54	N/A	$ 198.64	$ 212.54	$ 212.54	$ 198.64	$ 198.64	$ 258.23
W1236	WALL CABINET 1 DOOR 2 SHELF	$ 229.34	$ 229.34	$ 245.40	N/A	$ 229.34	$ 245.40	$ 245.40	$ 229.34	$ 229.34	$ 298.14
W1536	WALL CABINET 1 DOOR 2 SHELF	$ 257.43	$ 257.43	$ 275.45	N/A	$ 257.43	$ 275.45	$ 275.45	$ 257.43	$ 257.43	$ 334.66
W1836	WALL CABINET 1 DOOR 2 SHELF	$ 286.42	$ 286.42	$ 306.47	N/A	$ 286.42	$ 306.47	$ 306.47	$ 286.42	$ 286.42	$ 372.35
W2136	WALL CABINET 1 DOOR 2 SHELF	$ 366.43	$ 366.43	$ 392.08	N/A	$ 366.43	$ 392.08	$ 392.08	$ 366.43	$ 366.43	$ 476.36
W2436	WALL CABINET 2 DOOR 2 SHELF	$ 390.93	$ 390.93	$ 418.29	N/A	$ 390.93	$ 418.29	$ 418.29	$ 390.93	$ 390.93	$ 508.20
W2736	WALL CABINET 2 DOOR 2 SHELF	$ 414.70	$ 414.70	$ 443.73	N/A	$ 414.70	$ 443.73	$ 443.73	$ 414.70	$ 414.70	$ 539.12
W3036	WALL CABINET 2 DOOR 2 SHELF	$ 451.49	$ 451.49	$ 483.09	N/A	$ 451.49	$ 483.09	$ 483.09	$ 451.49	$ 451.49	$ 586.93
W3336	WALL CABINET 2 DOOR 2 SHELF	$ 464.03	$ 464.03	$ 496.51	N/A	$ 464.03	$ 496.51	$ 496.51	$ 464.03	$ 464.03	$ 603.24
W3636	WALL CABINET 2 DOOR 2 SHELF	$ 525.12	$ 525.12	$ 561.88	N/A	$ 525.12	$ 561.88	$ 561.88	$ 525.12	$ 525.12	$ 682.66
W4236	WALL CABINET 2 DOOR 2 SHELF	$ 549.99	$ 549.99	$ 588.49	N/A	$ 549.99	$ 588.49	$ 588.49	$ 549.99	$ 549.99	$ 714.98
W0942	WALL CABINET 1 DOOR 3 SHELF	$ 242.29	$ 242.29	$ 259.25	N/A	$ 242.29	$ 259.25	$ 259.25	$ 242.29	$ 242.29	$ 314.97
W1242	WALL CABINET 1 DOOR 3 SHELF	$ 283.16	$ 283.16	$ 302.98	N/A	$ 283.16	$ 302.98	$ 302.98	$ 283.16	$ 283.16	$ 368.11
W1542	WALL CABINET 1 DOOR 3 SHELF	$ 320.35	$ 320.35	$ 342.78	N/A	$ 320.35	$ 342.78	$ 342.78	$ 320.35	$ 320.35	$ 416.46
W1842	WALL CABINET 1 DOOR 3 SHELF	$ 346.71	$ 346.71	$ 370.98	N/A	$ 346.71	$ 370.98	$ 370.98	$ 346.71	$ 346.71	$ 450.72
W2142	WALL CABINET 1 DOOR 3 SHELF	$ 394.08	$ 394.08	$ 421.66	N/A	$ 394.08	$ 421.66	$ 421.66	$ 394.08	$ 394.08	$ 512.30
W2442	WALL CABINET 2 DOOR 3 SHELF	$ 427.61	$ 427.61	$ 457.54	N/A	$ 427.61	$ 457.54	$ 457.54	$ 427.61	$ 427.61	$ 555.89
W2742	WALL CABINET 2 DOOR 3 SHELF	$ 485.65	$ 485.65	$ 519.64	N/A	$ 485.65	$ 519.64	$ 519.64	$ 485.65	$ 485.65	$ 631.34
W3042	WALL CABINET 2 DOOR 3 SHELF	$ 498.90	$ 498.90	$ 533.82	N/A	$ 498.90	$ 533.82	$ 533.82	$ 498.90	$ 498.90	$ 648.57
W3342	WALL CABINET 2 DOOR 3 SHELF	$ 530.70	$ 530.70	$ 567.85	N/A	$ 530.70	$ 567.85	$ 567.85	$ 530.70	$ 530.70	$ 689.91
W3642	WALL CABINET 2 DOOR 3 SHELF	$ 583.26	$ 583.26	$ 624.09	N/A	$ 583.26	$ 624.09	$ 624.09	$ 583.26	$ 583.26	$ 758.24
W4242	WALL CABINET 2 DOOR 3 SHELF	$ 660.83	$ 660.83	$ 707.09	N/A	$ 660.83	$ 707.09	$ 707.09	$ 660.83	$ 660.83	$ 859.08

Cabinet Depot Product Skus

WALL CABINETS		SW	SG	SC	SN	SBW	SBC	SM	SD	SSD	SSO
		Shaker White	Shakler Grey	Shaker Caramel	Shaker Naval	Sturbridge White	Sturbridge Caramel	Shaker Moss	Shaker Dove	Slim Shaker Dove	Slim Shaker Oak
ITEM CODE	DESCRIPTION	LIST PRICE									
W301224	WALL FRIDGE CABINET 2 DOOR	$ 256.34	$ 256.34	$ 274.28	N/A	$ 256.34	$ 274.28	$ 274.28	$ 256.34	$ 256.34	$ 333.24
W331224	WALL FRIDGE CABINET 2 DOOR	$ 303.68	$ 303.68	$ 324.94	N/A	$ 303.68	$ 324.94	$ 324.94	$ 303.68	$ 303.68	$ 394.79
W361224	WALL FRIDGE CABINET 2 DOOR	$ 394.36	$ 394.36	$ 421.97	N/A	$ 394.36	$ 421.97	$ 421.97	$ 394.36	$ 394.36	$ 512.67
W301524	WALL FRIDGE CABINET 2 DOOR	$ 280.22	$ 280.22	$ 299.83	N/A	$ 280.22	$ 299.83	$ 299.83	$ 280.22	$ 280.22	$ 364.28
W331524	WALL FRIDGE CABINET 2 DOOR	$ 311.70	$ 311.70	$ 333.51	N/A	$ 311.70	$ 333.51	$ 333.51	$ 311.70	$ 311.70	$ 405.20
W361524	WALL FRIDGE CABINET 2 DOOR	$ 355.66	$ 355.66	$ 380.56	N/A	$ 355.66	$ 380.56	$ 380.56	$ 355.66	$ 355.66	$ 462.36
W301824	WALL FRIDGE CABINET 2 DOOR 1 SHELF	$ 353.90	$ 353.90	$ 378.67	N/A	$ 353.90	$ 378.67	$ 378.67	$ 353.90	$ 353.90	$ 460.07
W331824	WALL FRIDGE CABINET 2 DOOR 1 SHELF	$ 387.37	$ 387.37	$ 414.49	N/A	$ 387.37	$ 414.49	$ 414.49	$ 387.37	$ 387.37	$ 503.59
W361824	WALL FRIDGE CABINET 2 DOOR 1 SHELF	$ 432.76	$ 432.76	$ 463.05	N/A	$ 432.76	$ 463.05	$ 463.05	$ 432.76	$ 432.76	$ 562.58
W302424	WALL FRIDGE CABINET 2 DOOR 1 SHELF	$ 426.02	$ 426.02	$ 455.85	N/A	$ 426.02	$ 455.85	$ 455.85	$ 426.02	$ 426.02	$ 553.83
W332424	WALL FRIDGE CABINET 2 DOOR 1 SHELF	$ 443.38	$ 443.38	$ 474.42	N/A	$ 443.38	$ 474.42	$ 474.42	$ 443.38	$ 443.38	$ 576.40
W362424	WALL FRIDGE CABINET 2 DOOR 1 SHELF	$ 508.66	$ 508.66	$ 544.26	N/A	$ 508.66	$ 544.26	$ 544.26	$ 508.66	$ 508.66	$ 661.25
WDC2412	WALL DIGAGONAL CORNER CABINET 1 DOOR - NO SHELF	$ 212.07	N/A	N/A	N/A	$ 212.07	$ 226.91	$ 226.91	$ 212.07	$ 212.07	$ 275.69
WDC2430	WALL DIAGONAL CORNER CABINET 1 DOOR 2 SHELF	$ 419.65	$ 419.65	$ 449.03	N/A	$ 419.65	$ 449.03	$ 449.03	$ 419.65	$ 419.65	$ 545.55
WDC2436	WALL DIAGONAL CORNER CABINET 1 DOOR 2 SHELF	$ 466.51	$ 466.51	$ 499.16	N/A	$ 466.51	$ 499.16	$ 499.16	$ 466.51	$ 466.51	$ 606.46
WDC2442	WALL DIAGONAL CORNER CABINET 1 DOOR 3 SHELF	$ 560.69	$ 560.69	$ 599.93	N/A	$ 560.69	$ 599.93	$ 599.93	$ 560.69	$ 560.69	$ 728.89
WLS2430	WALL Lazy Susan CABINET 2 DOOR 2 SHELF	$ 440.48	$ 440.48	$ 471.31	N/A	$ 440.48	$ 471.31	$ 471.31	$ 440.48	$ 440.48	$ 572.62
WLS2436	WALL Lazy Susan CABINET 2 DOOR 2 SHELF	$ 491.26	$ 491.26	$ 525.65	N/A	$ 491.26	$ 525.65	$ 525.65	$ 491.26	$ 491.26	$ 638.64
WLS2442	WALL Lazy Susan CABINET 2 DOOR 3 SHELF	$ 579.06	$ 579.06	$ 619.59	N/A	$ 579.06	$ 619.59	$ 619.59	$ 579.06	$ 579.06	$ 752.77
WBL2730	WALL BLIND CORNER CABINET 1 DOOR 2 SHELF	$ 312.79	$ 312.79	$ 334.68	N/A	$ 312.79	$ 334.68	$ 334.68	$ 312.79	$ 312.79	$ 406.62
WBL2736	WALL BLIND CORNER CABINET 1 DOOR 2 SHELF	$ 361.24	$ 361.24	$ 386.53	N/A	$ 361.24	$ 386.53	$ 386.53	$ 361.24	$ 361.24	$ 469.62
WBL2742	WALL BLIND CORNER CABINET 1 DOOR 3 SHELF	$ 457.75	$ 457.75	$ 489.79	N/A	$ 457.75	$ 489.79	$ 489.79	$ 457.75	$ 457.75	$ 595.07
WMC2730	WALL MICROWAVE CABINET 27" WIDE 2 DOOR 1 SHELF	$ 344.12	N/A	N/A	N/A	N/A	N/A	N/A	N/A	N/A	N/A
WMC2736	WALL MICROWAVE CABINET 27" WIDE 2 DOOR 1 SHELF	$ 429.11	N/A	N/A	N/A	N/A	N/A	N/A	N/A	N/A	N/A
WEC1230	WALL END ANGLE CABINET 1 DOOR 2 SHELF	$ 205.63	N/A	N/A	N/A	N/A	N/A	N/A	N/A	N/A	N/A
WEC1236	WALL END ANGLE CABINET 1 DOOR 2 SHELF	$ 230.38	N/A	N/A	N/A	N/A	N/A	N/A	N/A	N/A	N/A
WEC1242	WALL END ANGLE CABINET 1 DOOR 3 SHELF	$ 264.19	N/A	N/A	N/A	N/A	N/A	N/A	N/A	N/A	N/A
WOC3018	Wall Open Cabibet 30Wx18Hx12D	$ 193.05	N/A	$ 206.56	N/A	$ 193.05	$ 206.56	$ 206.56	$ 193.05	$ 193.05	$ 250.97
WMSF30	Microwave Shelf for WOC3018	$ 69.23	N/A	$ 74.08	N/A	$ 69.23	$ 74.08	$ 74.08	$ 69.23	$ 69.23	$ 90.00
WXSF30	"X" Shelf for WOC3018	$ 82.50	N/A	$ 88.28	N/A	$ 82.50	$ 88.28	$ 88.28	$ 82.50	$ 82.50	$ 107.25

CabTec Product Skus

PANTRY & WALL CABINETS		SW	SG	SC	SN	SBW	SBC	SM	SD	SSD	SSO
		Shaker White	Shakler Grey	Shaker Caramel	Shaker Naval	Sturbridge White	Sturbridge Caramel	Shaker Moss	Shaker Dove	Slim Shaker Dove	Slim Shaker Oak
ITEM CODE	DESCRIPTION	LIST PRICE									
WP1884	WALL PANTRY CABINET 2 DOOR 3 ROLLOUTS 2 SHELVES	$ 903.95	$ 903.95	$ 967.22	N/A	$ 903.95	$ 967.22	$ 967.22	$ 903.95	$ 903.95	$ 1,175.13
WP1890	WALL PANTRY CABINET 2 DOOR 3 ROLLOUTS 2 SHELVES	$ 946.19	$ 946.19	$ 1,012.43	N/A	$ 946.19	$ 1,012.43	$ 1,012.43	$ 946.19	$ 946.19	$ 1,230.05
WP1896	WALL PANTRY CABINET 2 DOOR 3 ROLLOUTS 3 SHELVES	$ 997.57	$ 997.57	$ 1,067.40	N/A	$ 997.57	$ 1,067.40	$ 1,067.40	$ 997.57	$ 997.57	$ 1,296.84
WP2484	WALL PANTRY CABINET 4 DOOR 3 ROLLOUTS 2 SHELVES	$ 1,110.74	$ 1,110.74	$ 1,188.50	N/A	$ 1,110.74	$ 1,188.50	$ 1,188.50	$ 1,110.74	$ 1,110.74	$ 1,443.97
WP2490	WALL PANTRY CABINET 4 DOOR 3 ROLLOUTS 2 SHELVES	$ 1,180.00	$ 1,180.00	$ 1,262.60	N/A	$ 1,180.00	$ 1,262.60	$ 1,262.60	$ 1,180.00	$ 1,180.00	$ 1,534.00
WP3084	WALL PANTRY CABINET 4 DOOR 3 ROLLOUTS 2 SHELVES	$ 1,265.75	$ 1,265.75	$ 1,354.35	N/A	$ 1,265.75	$ 1,354.35	$ 1,354.35	$ 1,265.75	$ 1,265.75	$ 1,645.47
WP3090	WALL PANTRY CABINET 4 DOOR 3 ROLLOUTS 2 SHELVES	$ 1,305.90	$ 1,305.90	$ 1,397.32	N/A	$ 1,305.90	$ 1,397.32	$ 1,397.32	$ 1,305.90	$ 1,305.90	$ 1,697.68
WP2496	WALL PANTRY CABINET 4 DOOR 3 ROLLOUTS 3 SHELVES	$ 1,259.82	$ 1,259.82	$ 1,348.01	N/A	$ 1,259.82	$ 1,348.01	$ 1,348.01	$ 1,259.82	$ 1,259.82	$ 1,637.77
WP3096	WALL PANTRY CABINET 4 DOOR 3 ROLLOUTS 3 SHELVES	$ 1,377.53	$ 1,377.53	$ 1,473.96	N/A	$ 1,377.53	$ 1,473.96	$ 1,473.96	$ 1,377.53	$ 1,377.53	$ 1,790.79
MWP278424	MICROWAVE PANTRY 4 DOOR 1 DRAWER 2 ROLLOUTS 2 SHELVES	$ 1,232.06	N/A	N/A	N/A	N/A	N/A	N/A	N/A	N/A	N/A
MWP279024	MICROWAVE PANTRY 4 DOOR 1 DRAWER 2 ROLLOUTS 2 SHELVES	$ 1,284.11	N/A	N/A	N/A	N/A	N/A	N/A	N/A	N/A	N/A
MWP279624	MICROWAVE PANTRY 4 DOOR 1 DRAWER 2 ROLLOUTS 3 SHELVES	$ 1,373.65	N/A	N/A	N/A	N/A	N/A	N/A	N/A	N/A	N/A
OC338424	UNIVERSAL OVEN CABINET 2 DOOR 3 DRAWER	$ 1,336.62	$ 1,336.62	$ 1,430.18	N/A	$ 1,336.62	$ 1,430.18	$ 1,430.18	$ 1,336.62	$ 1,336.62	$ 1,737.60
OC339024	UNIVERSAL OVEN CABINET 2 DOOR 3 DRAWER	$ 1,416.81	$ 1,416.81	$ 1,515.99	N/A	$ 1,416.81	$ 1,515.99	$ 1,515.99	$ 1,416.81	$ 1,416.81	$ 1,841.85
OC339624	UNIVERSAL OVEN CABINET 2 DOOR 3 DRAWER	$ 1,501.81	$ 1,501.81	$ 1,606.94	N/A	$ 1,501.81	$ 1,606.94	$ 1,606.94	$ 1,501.81	$ 1,501.81	$ 1,952.35
OCD338424	DOUBLE OVEN CABINET 2 DOOR 1 DRAWER	$ 1,336.62	N/A	N/A	N/A	N/A	N/A	N/A	N/A	N/A	N/A
OCD339024	DOUBLE OVEN CABINET 2 DOOR 1 DRAWER	$ 1,416.81	N/A	N/A	N/A	N/A	N/A	N/A	N/A	N/A	N/A
OCD339624	DOUBLE OVEN CABINET 2 DOOR 1 DRAWER	$ 1,501.81	N/A	N/A	N/A	N/A	N/A	N/A	N/A	N/A	N/A

CabTec Product Skus

STORAGE, ORGANIZATION & WOOD HOODS		SW	SG	SC	SN	SBW	SBC	SM	SD	SSD	SSO
		Shaker White	Shakler Grey	Shaker Caramel	Shaker Naval	Sturbridge White	Sturbridge Caramel	Shaker Moss	Shaker Dove	Slim Shaker Dove	Slim Shaker Oak
ITEM CODE	DESCRIPTION	LIST PRICE									
STORAGE & ORGANIZATION											
RD18	NATURAL COLOR ROLL OUT DRAWER FOR 18 BASE WITH GLIDES	$ 85.18	$ 85.18	$ 85.18	$ 85.18	$ 85.18	$ 85.18	$ 85.18	$ 85.18	$ 85.18	$ 85.18
RD21	NATURAL COLOR ROLL OUT DRAWER FOR 21 BASE WITH GLIDES	$ 89.44	$ 89.44	$ 89.44	$ 89.44	$ 89.44	$ 89.44	$ 89.44	$ 89.44	$ 89.44	$ 89.44
RD24	NATURAL COLOR ROLL OUT DRAWER FOR 24 BASE WITH GLIDES	$ 93.91	$ 93.91	$ 93.91	$ 93.91	$ 93.91	$ 93.91	$ 93.91	$ 93.91	$ 93.91	$ 93.91
RD27	NATURAL COLOR ROLL OUT DRAWER FOR 27 BASE WITH GLIDES	$ 101.41	$ 101.41	$ 101.41	$ 101.41	$ 101.41	$ 101.41	$ 101.41	$ 101.41	$ 101.41	$ 101.41
RD30	NATURAL COLOR ROLL OUT DRAWER FOR 30 BASE WITH GLIDES	$ 106.43	$ 106.43	$ 106.43	$ 106.43	$ 106.43	$ 106.43	$ 106.43	$ 106.43	$ 106.43	$ 106.43
RD33	NATURAL COLOR ROLL OUT DRAWER FOR 33 BASE WITH GLIDES	$ 113.44	$ 113.44	$ 113.44	$ 113.44	$ 113.44	$ 113.44	$ 113.44	$ 113.44	$ 113.44	$ 113.44
RD36	NATURAL COLOR ROLL OUT DRAWER FOR 36 BASE WITH GLIDES	$ 118.80	$ 118.80	$ 118.80	$ 118.80	$ 118.80	$ 118.80	$ 118.80	$ 118.80	$ 118.80	$ 118.80
RD39	NATURAL COLOR ROLL OUT DRAWER FOR 39 BASE WITH GLIDES	$ 124.58	$ 124.58	$ 124.58	$ 124.58	$ 124.58	$ 124.58	$ 124.58	$ 124.58	$ 124.58	$ 124.58
RD42	NATURAL COLOR ROLL OUT DRAWER FOR 42 BASE WITH GLIDES	$ 130.35	$ 130.35	$ 130.35	$ 130.35	$ 130.35	$ 130.35	$ 130.35	$ 130.35	$ 130.35	$ 130.35
PNL1224	SPECIAL SHELVES THREE SIDE VENEER EDGEBAND	$ 65.29	$ 65.29	$ 69.86	N/A	$ 65.29	$ 69.86	$ 69.86	$ 65.29	$ 65.29	$ 91.41
PNL1230	SPECIAL SHELVES THREE SIDE VENEER EDGEBAND	$ 83.51	$ 83.51	$ 89.36	N/A	$ 83.51	$ 89.36	$ 89.36	$ 83.51	$ 83.51	$ 116.92
PNL1236	SPECIAL SHELVES THREE SIDE VENEER EDGEBAND	$ 128.16	$ 128.16	$ 137.13	N/A	$ 128.16	$ 137.13	$ 137.13	$ 128.16	$ 128.16	$ 179.42
PNL1248	SPECIAL SHELVES THREE SIDE VENEER EDGEBAND	$ 176.04	$ 176.04	$ 188.36	N/A	$ 176.04	$ 188.36	$ 188.36	$ 176.04	$ 176.04	$ 246.46
WRES0630	WINE RACK EURO-STYLE 6W X 30H X 12D	$ 395.32	$ 395.32	$ 422.99	N/A	$ 395.32	$ 422.99	$ 422.99	$ 395.32	$ 395.32	$ 553.44
WRES0636	WINE RACK EURO-STYLE 6W X 36H X 12D	$ 442.61	$ 442.61	$ 473.60	N/A	$ 442.61	$ 473.60	$ 473.60	$ 442.61	$ 442.61	$ 619.66
WR2430	WINE RACK WALL CABINET 24W X 30H X 12D	$ 380.19	N/A	N/A	N/A	N/A	N/A	N/A	N/A	N/A	N/A
WR3018	WINE RACK WALL CABINET 30W X 18H X 12D	$ 273.91	$ 273.91	$ 293.08	N/A	$ 273.91	$ 293.08	$ 293.08	$ 273.91	$ 273.91	$ 383.47
WR3618	WINE RACK WALL CABINET 36W X 18H X 12D	$ 305.03	$ 305.03	$ 326.38	N/A	$ 305.03	$ 326.38	$ 326.38	$ 305.03	$ 305.03	$ 427.04
KD30	KNEE DRAWER 30W x 6-3/4"H x 21D 1 DRAWER	$ 228.23	N/A	N/A	N/A	N/A	N/A	N/A	N/A	N/A	N/A
SGH36	Stem Glass Holder 36"W	$ 163.90	N/A	$ 175.37	N/A	$ 163.90	$ 175.37	$ 175.37	$ 163.90	$ 163.90	$ 229.46
WOOD HOODS											
RHA363021	DECORATIVE RANGE HOOD BOX 36	$ 1,369.10	$ 1,369.10	$ 1,464.94	N/A	$ 1,369.10	$ 1,464.94	$ 1,464.94	$ 1,369.10	$ 1,369.10	$ 1,916.74
RHA423021	DECORATIVE RANGE HOOD BOX 42	$ 1,520.29	$ 1,520.29	$ 1,626.71	N/A	$ 1,520.29	$ 1,626.71	$ 1,626.71	$ 1,520.29	$ 1,520.29	$ 2,128.41
NRH36	CHIMNEY STYLE WOOD HOOD	$ 1,092.85	$ 1,092.85	$ 1,169.35	N/A	$ 1,092.85	$ 1,169.35	$ 1,169.35	$ 1,092.85	$ 1,092.85	$ 1,529.99

Cabinet depot Product Skus

BATHROOM VANITIES		SW	SG	SC	SN	SBW	SBC	SM	SD	SSD	SSO
		Shaker White	Shakler Grey	Shaker Caramel	Shaker Naval	Sturbridge White	Sturbridge Caramel	Shaker Moss	Shaker Dove	Slim Shaker Dove	Slim Shaker Oak
ITEM CODE	DESCRIPTION	LIST PRICE									
V2421	VANITY BASE CABINET WITH 1 TIP OUT DRAWER 2 DOORS	$ 385.84	$ 385.84	$ 412.84	$ 412.84	$ 385.84	$ 412.84	$ 412.84	$ 385.84	$ 385.84	$ 501.59
V2721	VANITY BASE CABINET WITH 1 TIP OUT DRAWER 2 DOORS	$ 427.22	$ 427.22	$ 457.13	$ 457.13	$ 427.22	$ 457.13	$ 457.13	$ 427.22	$ 427.22	$ 555.39
V3021	VANITY BASE CABINET WITH 1 TIP OUT DRAWER 2 DOORS	$ 452.37	$ 452.37	$ 484.04	$ 484.04	$ 452.37	$ 484.04	$ 484.04	$ 452.37	$ 452.37	$ 588.08
V3621	VANITY BASE CABINET WITH 1 TIP OUT DRAWER 2 DOORS	$ 504.89	$ 504.89	$ 540.23	$ 540.23	$ 504.89	$ 540.23	$ 540.23	$ 504.89	$ 504.89	$ 656.36
VB12	VANITY BASE CABINET WITH 1 DRAWER AND 1 DOOR	$ 314.01	N/A	N/A	N/A	N/A	N/A	N/A	N/A	N/A	N/A
VB15	VANITY BASE CABINET WITH 1 DRAWER AND 1 DOOR	$ 348.48	N/A	N/A	N/A	N/A	N/A	N/A	N/A	N/A	N/A
VB18	VANITY BASE CABINET WITH 1 DRAWER AND 1 DOOR	$ 383.12	N/A	N/A	N/A	N/A	N/A	N/A	N/A	N/A	N/A
DV1545	VANITY COUNTERTOP LINEN CABINET 1 DOOR AND 2 DRAWER	$ 481.00	N/A	N/A	N/A	N/A	N/A	N/A	N/A	N/A	N/A
VDB1221	VANITY DRAWER BASE WITH 3 DRAWERS (1 SMALL 2 BIG)	$ 498.17	$ 498.17	$ 533.04	$ 533.04	$ 498.17	$ 533.04	$ 533.04	$ 498.17	$ 498.17	$ 647.62
VDB1521	VANITY DRAWER BASE WITH 3 DRAWERS (1 SMALL 2 BIG)	$ 536.91	$ 536.91	$ 574.49	$ 574.49	$ 536.91	$ 574.49	$ 574.49	$ 536.91	$ 536.91	$ 697.98
VDB1821	VANITY DRAWER BASE WITH 3 DRAWERS (1 SMALL 2 BIG)	$ 577.63	$ 577.63	$ 618.07	$ 618.07	$ 577.63	$ 618.07	$ 618.07	$ 577.63	$ 577.63	$ 750.92
VDB2121	VANITY DRAWER BASE WITH 3 DRAWERS (1 SMALL 2 BIG)	$ 618.35	N/A	N/A	N/A	N/A	N/A	N/A	N/A	N/A	N/A
VSD3021L	VANITY BASE CABINET 1 DOOR 1 TIP OUT DRAWER 2 DRAWERS (DRAWER ON LEFT)	$ 686.62	$ 686.62	$ 734.68	N/A	$ 686.62	$ 734.68	$ 734.68	$ 686.62	$ 686.62	$ 892.61
VSD3021R	VANITY BASE CABINET 1 DOOR 1 TIP OUT DRAWER 2 DRAWERS (DRAWER ON RIGHT)	$ 686.62	$ 686.62	$ 734.68	N/A	$ 686.62	$ 734.68	$ 734.68	$ 686.62	$ 686.62	$ 892.61
VSD3621L	VANITY BASE CABINET 1 DOOR 1 TIP OUT DRAWER 2 DRAWERS (DRAWER ON LEFT)	$ 775.67	$ 775.67	$ 829.97	N/A	$ 775.67	$ 829.97	$ 829.97	$ 775.67	$ 775.67	$ 1,008.37
VSD3621R	VANITY BASE CABINET 1 DOOR 1 TIP OUT DRAWER 2 DRAWERS (DRAWER ON RIGHT)	$ 775.67	$ 775.67	$ 829.97	N/A	$ 775.67	$ 829.97	$ 829.97	$ 775.67	$ 775.67	$ 1,008.37
VSD4221L	VANITY BASE CABINET 2 DOORS 1 TIP OUT DRAWER 2 DRAWERS (DRAWER ON LEFT)	$ 846.77	N/A	N/A	N/A	N/A	N/A	N/A	N/A	N/A	N/A
VSD4221R	VANITY BASE CABINET 2 DOORS 1 TIP OUT DRAWER 2 DRAWERS (DRAWER ON RIGHT)	$ 846.77	N/A	N/A	N/A	N/A	N/A	N/A	N/A	N/A	N/A
VSD4821	VANITY DRAWER CABINET, TWO DOORS, SIX DRAWERS, ONE TIP OUT	$ 1,230.28	$ 1,230.28	$ 1,316.40	N/A	$ 1,230.28	$ 1,316.40	$ 1,316.40	$ 1,230.28	$ 1,230.28	$ 1,599.37
VSD6021	VANITY DRAWER CABINET, TWO DOORS, SIX DRAWERS, ONE TIP OUT	$ 1,373.97	$ 1,373.97	$ 1,470.15	N/A	$ 1,373.97	$ 1,470.15	$ 1,470.15	$ 1,373.97	$ 1,373.97	$ 1,786.16
VCD6021	VANITY DRAWER CABINET, FOUR DOORS, THREE DRAWERS, TWO TIP OUT DRAWERS	$ 1,061.16	$ 1,061.16	$ 1,135.44	N/A	$ 1,061.16	$ 1,135.44	$ 1,135.44	$ 1,061.16	$ 1,061.16	$ 1,379.50
WD1818	WALL 3 DRAWER CABINET	$ 261.60	N/A	$ 279.91	N/A	$ 261.60	$ 279.91	$ 279.91	$ 261.60	$ 261.60	$ 340.08

Cabinet depot Product Skus

DECORATIVE DOORS		SW	SG	SC	SN	SBW	SBC	SM	SD	SSD	SSO
		Shaker White	Shakler Grey	Shaker Caramel	Shaker Naval	Sturbridge White	Sturbridge Caramel	Shaker Moss	Shaker Dove	Slim Shaker Dove	Slim Shaker Oak
ITEM CODE	DESCRIPTION	LIST PRICE									
DDW30	DECO WALL DOOR 12" X 3/4" X 30"	$ 82.50	$ 82.50	$ 88.28	$ 88.28	$ 82.50	$ 88.28	$ 88.28	$ 82.50	$ 82.50	$ 107.25
DDW36	DECO WALL DOOR 12" X 3/4" X 36"	$ 99.21	$ 99.21	$ 106.15	N/A	$ 99.21	$ 106.15	$ 106.15	$ 99.21	$ 99.21	$ 128.97
DDW42	DECO WALL DOOR 12" X 3/4" X 42"	$ 113.51	$ 113.51	$ 121.45	N/A	$ 113.51	$ 121.45	$ 121.45	$ 113.51	$ 113.51	$ 147.56
DDB30	DECO BASE DOOR 24" X 3/4" X 30"	$ 152.21	$ 152.21	$ 162.87	$ 162.87	$ 152.21	$ 162.87	$ 162.87	$ 152.21	$ 152.21	$ 197.88
WP1884TDD	TOP DOOR WITH HINGE HOLES AND BUMPERS FOR WP1884	$ 138.33	$ 138.33	$ 148.01	$ 148.01	$ 138.33	$ 148.01	$ 148.01	$ 138.33	$ 138.33	$ 179.82
WP1890TDD	TOP DOOR WITH HINGE HOLES AND BUMPERS FOR WP1890	$ 166.44	$ 166.44	$ 178.09	N/A	$ 166.44	$ 178.09	$ 178.09	$ 166.44	$ 166.44	$ 216.38
WP1896TDD	TOP DOOR WITH HINGE HOLES AND BUMPERS FOR WP1896	$ 194.49	$ 194.49	$ 208.11	N/A	$ 194.49	$ 208.11	$ 208.11	$ 194.49	$ 194.49	$ 252.84
WP2484TDD	TOP DOOR WITH HINGE HOLES AND BUMPERS FOR WP2484	$ 92.68	$ 92.68	$ 99.16	N/A	$ 92.68	$ 99.16	$ 99.16	$ 92.68	$ 92.68	$ 120.48
WP2490TDD	TOP DOOR WITH HINGE HOLES AND BUMPERS FOR WP2490	$ 111.44	$ 111.44	$ 119.24	N/A	$ 111.44	$ 119.24	$ 119.24	$ 111.44	$ 111.44	$ 144.88
WP2496TDD	TOP DOOR WITH HINGE HOLES AND BUMPERS FOR WP2496	$ 130.21	$ 130.21	$ 139.33	N/A	$ 130.21	$ 139.33	$ 139.33	$ 130.21	$ 130.21	$ 169.28
WP3084TDD	TOP DOOR WITH HINGE HOLES AND BUMPERS FOR WP3084	$ 116.33	$ 116.33	$ 124.47	$ 124.47	$ 116.33	$ 124.47	$ 124.47	$ 116.33	$ 116.33	$ 151.22
WP3090TDD	TOP DOOR WITH HINGE HOLES AND BUMPERS FOR WP3090	$ 139.84	$ 139.84	$ 149.63	N/A	$ 139.84	$ 149.63	$ 149.63	$ 139.84	$ 139.84	$ 181.79
WP3096TDD	TOP DOOR WITH HINGE HOLES AND BUMPERS FOR WP3096	$ 163.49	$ 163.49	$ 174.93	N/A	$ 163.49	$ 174.93	$ 174.93	$ 163.49	$ 163.49	$ 212.53
WP18XXBDD	BOTTOM DOOR WITH HINGE HOLES AND BUMPERS FOR WP18xx	$ 231.07	$ 231.07	$ 247.24	N/A	$ 231.07	$ 247.24	$ 247.24	$ 231.07	$ 231.07	$ 300.39
WP24XXBDD	BOTTOM DOOR WITH HINGE HOLES AND BUMPERS FOR WP24xx	$ 154.76	$ 154.76	$ 165.59	N/A	$ 154.76	$ 165.59	$ 165.59	$ 154.76	$ 154.76	$ 201.18
WP30XXBDD	BOTTOM DOOR WITH HINGE HOLES AND BUMPERS FOR WP30xx	$ 194.15	$ 194.15	$ 207.74	N/A	$ 194.15	$ 207.74	$ 207.74	$ 194.15	$ 194.15	$ 252.40

Cabinet depot Product Skus

GLASS DOORS		SW	SG	SC	SN	SBW	SBC	SM	SD	SSD	SSO
		Shaker White	Shakler Grey	Shaker Caramel	Shaker Naval	Sturbridge White	Sturbridge Caramel	Shaker Moss	Shaker Dove	Slim Shaker Dove	Slim Shaker Oak
ITEM CODE	DESCRIPTION	LIST PRICE									
W1212GD	GLASS DOOR (WITH GLASS AND CLIPS) FOR W1212 CABINET	$ 57.06	$ 57.06	$ 61.05	N/A	$ 57.06	$ 61.05	$ 61.05	$ 57.06	$ 57.06	$ 74.18
W1512GD	GLASS DOOR (WITH GLASS AND CLIPS) FOR W1512 CABINET	$ 65.80	$ 65.80	$ 70.41	N/A	$ 65.80	$ 70.41	$ 70.41	$ 65.80	$ 65.80	$ 85.54
W1812GD	GLASS DOOR (WITH GLASS AND CLIPS) FOR W1812 CABINET	$ 78.47	$ 78.47	$ 83.97	N/A	$ 78.47	$ 83.97	$ 83.97	$ 78.47	$ 78.47	$ 102.02
W2112GD	GLASS DOOR (WITH GLASS AND CLIPS) FOR W2112 CABINET	$ 91.15	$ 91.15	$ 97.53	N/A	$ 91.15	$ 97.53	$ 97.53	$ 91.15	$ 91.15	$ 118.50
W2412GD	GLASS DOOR (WITH GLASS AND CLIPS) FOR W2412 CABINET	$ 55.54	$ 55.54	$ 59.43	N/A	$ 55.54	$ 59.43	$ 59.43	$ 55.54	$ 55.54	$ 72.21
W2712GD	GLASS DOOR (WITH GLASS AND CLIPS) FOR W2712 CABINET	$ 60.26	$ 60.26	$ 64.47	N/A	$ 60.26	$ 64.47	$ 64.47	$ 60.26	$ 60.26	$ 78.33
W3012GD	GLASS DOOR (WITH GLASS AND CLIPS) FOR W3012 CABINET	$ 66.58	$ 66.58	$ 71.24	N/A	$ 66.58	$ 71.24	$ 71.24	$ 66.58	$ 66.58	$ 86.56
W3312GD	GLASS DOOR (WITH GLASS AND CLIPS) FOR W3312 CABINET	$ 72.93	$ 72.93	$ 78.04	N/A	$ 72.93	$ 78.04	$ 78.04	$ 72.93	$ 72.93	$ 94.81
W3612GD	GLASS DOOR (WITH GLASS AND CLIPS) FOR W3612 CABINET	$ 79.26	$ 79.26	$ 84.81	N/A	$ 79.26	$ 84.81	$ 84.81	$ 79.26	$ 79.26	$ 103.04
W1230GD	GLASS DOOR (WITH GLASS AND CLIPS) FOR W1230 CABINET	$ 68.68	$ 68.68	$ 73.49	N/A	$ 68.68	$ 73.49	$ 73.49	$ 68.68	$ 68.68	$ 89.29
W1236GD	GLASS DOOR (WITH GLASS AND CLIPS) FOR W1236 CABINET	$ 79.13	$ 79.13	$ 84.67	N/A	$ 79.13	$ 84.67	$ 84.67	$ 79.13	$ 79.13	$ 102.87
W1242GD	GLASS DOOR (WITH GLASS AND CLIPS) FOR W1242 CABINET	$ 89.51	$ 89.51	$ 95.78	N/A	$ 89.51	$ 95.78	$ 95.78	$ 89.51	$ 89.51	$ 116.37
W1530GD	GLASS DOOR (WITH GLASS AND CLIPS) FOR W1530 CABINET	$ 72.74	$ 72.74	$ 77.83	N/A	$ 72.74	$ 77.83	$ 77.83	$ 72.74	$ 72.74	$ 94.56
W1536GD	GLASS DOOR (WITH GLASS AND CLIPS) FOR W1536 CABINET	$ 83.94	$ 83.94	$ 89.82	N/A	$ 83.94	$ 89.82	$ 89.82	$ 83.94	$ 83.94	$ 109.13
W1542GD	GLASS DOOR (WITH GLASS AND CLIPS) FOR W1542 CABINET	$ 94.94	$ 94.94	$ 101.59	N/A	$ 94.94	$ 101.59	$ 101.59	$ 94.94	$ 94.94	$ 123.43
W1830GD	GLASS DOOR (WITH GLASS AND CLIPS) FOR W1830 CABINET	$ 77.21	$ 77.21	$ 82.61	N/A	$ 77.21	$ 82.61	$ 82.61	$ 77.21	$ 77.21	$ 100.37
W1836GD	GLASS DOOR (WITH GLASS AND CLIPS) FOR W1836 CABINET	$ 88.96	$ 88.96	$ 95.19	N/A	$ 88.96	$ 95.19	$ 95.19	$ 88.96	$ 88.96	$ 115.65
W1842GD	GLASS DOOR (WITH GLASS AND CLIPS) FOR W1842 CABINET	$ 100.65	$ 100.65	$ 107.70	N/A	$ 100.65	$ 107.70	$ 107.70	$ 100.65	$ 100.65	$ 130.85
W2130GD	GLASS DOOR (WITH GLASS AND CLIPS) FOR W2130 CABINET	$ 89.44	$ 89.44	$ 95.70	N/A	$ 89.44	$ 95.70	$ 95.70	$ 89.44	$ 89.44	$ 116.28
W2136GD	GLASS DOOR (WITH GLASS AND CLIPS) FOR W2136 CABINET	$ 103.19	$ 103.19	$ 110.42	N/A	$ 103.19	$ 110.42	$ 110.42	$ 103.19	$ 103.19	$ 134.15
W2142GD	GLASS DOOR (WITH GLASS AND CLIPS) FOR W2142 CABINET	$ 116.81	$ 116.81	$ 124.98	N/A	$ 116.81	$ 124.98	$ 124.98	$ 116.81	$ 116.81	$ 151.85
W2430GD	GLASS DOOR (WITH GLASS AND CLIPS) FOR W2430 CABINET	$ 72.12	$ 72.12	$ 77.17	N/A	$ 72.12	$ 77.17	$ 77.17	$ 72.12	$ 72.12	$ 93.76
W2436GD	GLASS DOOR (WITH GLASS AND CLIPS) FOR W2436 CABINET	$ 83.09	$ 83.09	$ 88.91	N/A	$ 83.09	$ 88.91	$ 88.91	$ 83.09	$ 83.09	$ 108.02

Cabinet depot Product Skus

GLASS DOORS		SW	SG	SC	SN	SBW	SBC	SM	SD	SSD	SSO
		Shaker White	Shakler Grey	Shaker Caramel	Shaker Naval	Sturbridge White	Sturbridge Caramel	Shaker Moss	Shaker Dove	Slim Shaker Dove	Slim Shaker Oak
ITEM CODE	DESCRIPTION	LIST PRICE									
W2442GD	GLASS DOOR (WITH GLASS AND CLIPS) FOR W2442 CABINET	$ 93.99	$ 93.99	$ 100.57	N/A	$ 93.99	$ 100.57	$ 100.57	$ 93.99	$ 93.99	$ 122.19
W2730GD	GLASS DOOR (WITH GLASS AND CLIPS) FOR W2730 CABINET	$ 70.74	$ 70.74	$ 75.70	N/A	$ 70.74	$ 75.70	$ 75.70	$ 70.74	$ 70.74	$ 91.97
W2736GD	GLASS DOOR (WITH GLASS AND CLIPS) FOR W2736 CABINET	$ 81.54	$ 81.54	$ 87.25	N/A	$ 81.54	$ 87.25	$ 87.25	$ 81.54	$ 81.54	$ 106.00
W2742GD	GLASS DOOR (WITH GLASS AND CLIPS) FOR W2742 CABINET	$ 92.26	$ 92.26	$ 98.72	N/A	$ 92.26	$ 98.72	$ 98.72	$ 92.26	$ 92.26	$ 119.94
W3030GD	GLASS DOOR (WITH GLASS AND CLIPS) FOR W3030 CABINET	$ 73.20	$ 73.20	$ 78.32	N/A	$ 73.20	$ 78.32	$ 78.32	$ 73.20	$ 73.20	$ 95.16
W3036GD	GLASS DOOR (WITH GLASS AND CLIPS) FOR W3036 CABINET	$ 84.59	$ 84.59	$ 90.51	N/A	$ 84.59	$ 90.51	$ 90.51	$ 84.59	$ 84.59	$ 109.97
W3042GD	GLASS DOOR (WITH GLASS AND CLIPS) FOR W3042 CABINET	$ 95.70	$ 95.70	$ 102.40	N/A	$ 95.70	$ 102.40	$ 102.40	$ 95.70	$ 95.70	$ 124.41
W3330GD	GLASS DOOR (WITH GLASS AND CLIPS) FOR W3330 CABINET	$ 74.94	$ 74.94	$ 80.18	N/A	$ 74.94	$ 80.18	$ 80.18	$ 74.94	$ 74.94	$ 97.42
W3336GD	GLASS DOOR (WITH GLASS AND CLIPS) FOR W3336 CABINET	$ 86.42	$ 86.42	$ 92.47	N/A	$ 86.42	$ 92.47	$ 92.47	$ 86.42	$ 86.42	$ 112.34
W3342GD	GLASS DOOR (WITH GLASS AND CLIPS) FOR W3342 CABINET	$ 97.83	$ 97.83	$ 104.68	N/A	$ 97.83	$ 104.68	$ 104.68	$ 97.83	$ 97.83	$ 127.18
W3630GD	GLASS DOOR (WITH GLASS AND CLIPS) FOR W3630 CABINET	$ 78.93	$ 78.93	$ 84.46	N/A	$ 78.93	$ 84.46	$ 84.46	$ 78.93	$ 78.93	$ 102.61
W3636GD	GLASS DOOR (WITH GLASS AND CLIPS) FOR W3636 CABINET	$ 90.75	$ 90.75	$ 97.10	N/A	$ 90.75	$ 97.10	$ 97.10	$ 90.75	$ 90.75	$ 117.98
W3642GD	GLASS DOOR (WITH GLASS AND CLIPS) FOR W3642 CABINET	$ 102.19	$ 102.19	$ 109.34	N/A	$ 102.19	$ 109.34	$ 109.34	$ 102.19	$ 102.19	$ 132.85
WDC2412GD	GLASS DOOR (WITH GLASS AND CLIPS) FOR WDC2412 CABINET	$ 63.46	N/A	N/A	N/A	N/A	N/A	N/A	N/A	N/A	N/A
WDC2430GD	GLASS DOOR (WITH GLASS AND CLIPS) FOR WDC2430 CABINET	$ 70.19	$ 70.19	$ 75.11	N/A	$ 70.19	$ 75.11	$ 75.11	$ 70.19	$ 70.19	$ 91.25
WDC2436GD	GLASS DOOR (WITH GLASS AND CLIPS) FOR WDC2436 CABINET	$ 80.78	$ 80.78	$ 86.44	N/A	$ 80.78	$ 86.44	$ 86.44	$ 80.78	$ 80.78	$ 105.02
WDC2442GD	GLASS DOOR (WITH GLASS AND CLIPS) FOR WDC2442 CABINET	$ 97.76	$ 97.76	$ 104.61	N/A	$ 97.76	$ 104.61	$ 104.61	$ 97.76	$ 97.76	$ 127.09
WEC1230GD	GLASS DOOR (WITH GLASS AND CLIPS) FOR WEC1230 CABINET	$ 70.47	N/A	N/A	N/A	N/A	N/A	N/A	N/A	N/A	N/A
WEC1236GD	GLASS DOOR (WITH GLASS AND CLIPS) FOR WEC1236 CABINET	$ 82.50	N/A	N/A	N/A	N/A	N/A	N/A	N/A	N/A	N/A
WEC1242GD	GLASS DOOR (WITH GLASS AND CLIPS) FOR WEC1242 CABINET	$ 99.69	N/A	N/A	N/A	N/A	N/A	N/A	N/A	N/A	N/A
WLS2430GD	GLASS DOOR (WITH GLASS AND CLIPS) FOR WLS2430 CABINET	$ 67.76	$ 67.76	$ 72.50	N/A	$ 67.76	$ 72.50	$ 72.50	$ 67.76	$ 67.76	$ 88.09
WLS2436GD	GLASS DOOR (WITH GLASS AND CLIPS) FOR WLS2436 CABINET	$ 79.52	$ 79.52	$ 85.09	N/A	$ 79.52	$ 85.09	$ 85.09	$ 79.52	$ 79.52	$ 103.38
WLS2442GD	GLASS DOOR (WITH GLASS AND CLIPS) FOR WLS2442 CABINET	$ 91.28	$ 91.28	$ 97.67	N/A	$ 91.28	$ 97.67	$ 97.67	$ 91.28	$ 91.28	$ 118.66

Cabinet depot Product Skus

MOULDINGS, PANELS & FILLERS		SW	SG	SC	SN	SBW	SBC	SM	SD	SSD	SSO
		Shaker White	Shakler Grey	Shaker Caramel	Shaker Naval	Sturbridge White	Sturbridge Caramel	Shaker Moss	Shaker Dove	Slim Shaker Dove	Slim Shaker Oak
ITEM CODE	DESCRIPTION	LIST PRICE									
MOULDINGS											
SBBM	SHAKER BASEBOARD MOLDING 96" x 4-1/2"	$ 130.63	$ 130.63	$ 139.77	$ 139.77	$ 130.63	$ 139.77	$ 139.77	$ 130.63	$ 130.63	$ 182.88
BBM	BASEBOARD MOLDING 96" x 4-1/2"	$ 117.56	N/A	N/A	N/A	N/A	N/A	N/A	N/A	N/A	N/A
CM2	CROWN MOULDING 96" x 2-1/8"	$ 91.09	N/A	N/A	N/A	$ 91.09	N/A	N/A	N/A	N/A	N/A
SCM2	SHAKER CROWN MOLDING 2-1/4"	$ 123.80	$ 123.80	$ 132.47	N/A	$ 123.80	$ 132.47	$ 132.47	$ 123.80	$ 123.80	$ 173.32
CM4	CROWN MOLDING 96" x 3-1/4"	$ 144.24	N/A	N/A	N/A	$ 144.24	N/A	N/A	N/A	N/A	N/A
SCM6	SHAKER CROWN MOLDING 3-5/8"	$ 221.36	$ 221.36	$ 236.85	N/A	$ 221.36	$ 236.85	$ 236.85	$ 221.36	$ 221.36	$ 309.90
CM6	CROWN MOLDING 96"	$ 173.11	N/A	N/A	N/A	$ 173.11	N/A	N/A	N/A	N/A	N/A
CRM	CHAIR RAIL MOLDING 96" x 1-1/8"H	$ 54.73	N/A	N/A	N/A	N/A	N/A	N/A	N/A	N/A	N/A
OCM	OUTSIDE CORNER MOLDING 96" x 1"	$ 46.59	$ 46.59	$ 49.85	$ 49.85	$ 46.59	$ 49.85	$ 49.85	$ 46.59	$ 46.59	$ 65.23
SM	SCRIBE MOLDING 96" x 3/4"	$ 24.34	$ 24.34	$ 26.04	$ 26.04	$ 24.34	$ 26.04	$ 26.04	$ 24.34	$ 24.34	$ 34.07
TK	TOK KICK 96" x 4-1/2"	$ 35.52	$ 35.52	$ 38.00	$ 38.00	$ 35.52	$ 38.00	$ 38.00	$ 35.52	$ 35.52	$ 49.72
CLR	LiGHT RAIL 96" x 1-1/2" (Contemporaty)	$ 54.89	$ 54.89	$ 58.73	N/A	$ 54.89	$ 58.73	$ 58.73	$ 54.89	$ 54.89	$ 76.85
TLR	LIGHT RAIL 96" x 2" (TRADITIONAL)	$ 117.29	N/A	N/A	N/A	N/A	N/A	N/A	N/A	N/A	N/A
QRM8	QUARTER ROUND MOLDING	$ 61.12	$ 61.12	$ 65.40	$ 65.40	$ 61.12	$ 65.40	$ 65.40	$ 61.12	$ 61.12	$ 85.57
ALRM	ANGLE LIGHT RAIL MOLDING	$ 159.98	N/A	$ 171.17	N/A	$ 159.98	$ 171.17	$ 171.17	$ 159.98	$ 159.98	$ 223.97
ACM	ANGLE CROWN MOLDING	$ 110.55	N/A	$ 118.29	N/A	$ 110.55	$ 118.29	$ 118.29	$ 110.55	$ 110.55	$ 154.77
LACM	LARGE ANGLE CROWN MOLDING	$ 176.25	N/A	$ 188.59	N/A	$ 176.25	$ 188.59	$ 188.59	$ 176.25	$ 176.25	$ 246.75
PANELS & FILLERS											
DWR36	DISWASHER RETURN PANEL 3" x 24" x 36" WOOD FRONT	$ 91.44	$ 91.44	$ 97.84	$ 97.84	$ 91.44	$ 97.84	$ 97.84	$ 91.44	$ 91.44	$ 128.01
REP9630	REFRIGERATOR END PANEL 1-1/2" x 30" x 96" WOOD FRONT	$ 210.25	$ 210.25	$ 224.97	N/A	$ 210.25	$ 224.97	$ 224.97	$ 210.25	$ 210.25	$ 294.35
BP96361/4	BASE SKIN PANEL 96" x 1/4" x 36" FINISHED ONE SIDE	$ 156.89	$ 156.89	$ 167.87	$ 167.87	$ 156.89	$ 167.87	$ 167.87	$ 156.89	$ 156.89	$ 219.64
BP96481/2	BASE PANEL 96" x 1/2" x 48" FINISHED BOTH SIDES	$ 321.75	$ 321.75	$ 344.27	N/A	$ 321.75	$ 344.27	$ 344.27	$ 321.75	$ 321.75	$ 450.45
FB4N/A83/4	FINISHED PLYWOOD 96" x 3/4"D x 48" FINISHED 6 SIDES	$ 417.40	$ 417.40	$ 446.61	$ 446.61	$ 417.40	$ 446.61	$ 446.61	$ 417.40	$ 417.40	$ 584.35
WF342	WALL FILLER 3" x 3/4" x 42"	$ 27.71	$ 27.71	$ 29.65	N/A	$ 27.71	$ 29.65	$ 29.65	$ 27.71	$ 27.71	$ 38.79
WF396	WALL FILLER 6" x 3/4" x 30"	$ 86.30	$ 86.30	$ 92.34	$ 92.34	$ 86.30	$ 92.34	$ 92.34	$ 86.30	$ 86.30	$ 120.81
WF642	TALL FILLER 3" x 3/4" x 96"	$ 61.39	$ 61.39	$ 65.69	N/A	$ 61.39	$ 65.69	$ 65.69	$ 61.39	$ 61.39	$ 85.95
WF696	TALL FILLER 6" x 3/4" x 96"	$ 144.03	$ 144.03	$ 154.11	$ 154.11	$ 144.03	$ 154.11	$ 154.11	$ 144.03	$ 144.03	$ 201.64
BF3	BASE FILLER 3" x 3/4" x 34-1/2"	$ 29.62	$ 29.62	$ 31.69	$ 31.69	$ 29.62	$ 31.69	$ 31.69	$ 29.62	$ 29.62	$ 41.46
BF6	BASE FILLER 6" x 3/4" x 34-1/2"	$ 59.40	$ 59.40	$ 63.56	$ 63.56	$ 59.40	$ 63.56	$ 63.56	$ 59.40	$ 59.40	$ 83.16

Cabinet depot Product Skus

OTHER ITEMS		SW	SG	SC	SN	SBW	SBC	SM	SD	SSD	SSO
		Shaker White	Shakler Grey	Shaker Caramel	Shaker Naval	Sturbridge White	Sturbridge Caramel	Shaker Moss	Shaker Dove	Slim Shaker Dove	Slim Shaker Oak
ITEM CODE	DESCRIPTION	LIST PRICE									
VALANCES, CORBELS & POSTS											
VAL36	ARCHED VALANCE 36" X 3/4" X 5"	$ 101.20	$ 101.20	$ 108.28	N/A	$ 101.20	$ 108.28	$ 108.28	$ 101.20	$ 101.20	$ 141.68
VAL45	ARCHED VALANCE 45" X 3/4" X 5"	$ 112.41	$ 112.41	$ 120.27	N/A	$ 112.41	$ 120.27	$ 120.27	$ 112.41	$ 112.41	$ 157.37
VAL54	ARCHED VALANCE 54" X 3/4" X 5"	$ 125.40	N/A	N/A	N/A	N/A	N/A	N/A	N/A	N/A	N/A
VAL65	ARCHED VALANCE 65" X 3/4" X 5"	$ 181.16	N/A	N/A	N/A	N/A	N/A	N/A	N/A	N/A	N/A
CB9	SMALL CORBEL 4-3/4"W X 5"D X 10"H	$ 171.88	$ 171.88	$ 183.91	$ 183.91	$ 171.88	$ 183.91	$ 183.91	$ 171.88	$ 171.88	$ 240.63
SSP4X36	STANDARD SHAKER POST 4-1/2" X 4-1/2" X 36"H	$ 337.26	$ 337.26	$ 360.87	$ 360.87	$ 337.26	$ 360.87	$ 360.87	$ 337.26	$ 337.26	$ 472.16
SP4X36	STANDARD POST 4-1/2" X 4-1/2" X 36"H	$ 281.05	N/A	N/A	N/A	N/A	N/A	N/A	N/A	N/A	N/A
END PANELS											
BEPL	5/8" FINISHED BASE END PANEL (LEFT)	N/R	$ 57.94	$ 61.99	$ 61.99	$ 57.94	$ 61.99	$ 61.99	$ 57.94	$ 57.94	$ 81.11
BEPR	5/8" FINISHED BASE END PANEL (RIGHT)	N/R	$ 57.94	$ 61.99	$ 61.99	$ 57.94	$ 61.99	$ 61.99	$ 57.94	$ 57.94	$ 81.11
WEP30	5/8" NIVERSAL WALL END PANEL 30"H	N/R	$ 25.00	$ 26.75	$ 26.75	$ 25.00	$ 26.75	$ 26.75	$ 25.00	$ 25.00	$ 35.01
WEP36	5/8" UNIVERSAL WALL END PANEL 36"H	N/R	$ 29.94	$ 32.04	N/A	$ 29.94	$ 32.04	$ 32.04	$ 29.94	$ 29.94	$ 41.92
WEP42	5/8" UNIVERSAL WALL END PANEL 42"H	N/R	$ 34.91	$ 37.36	N/A	$ 34.91	$ 37.36	$ 37.36	$ 34.91	$ 34.91	$ 48.88
BSV	BASE SKIN 23-1/4" X 34-1/2" X 1/4", Finish 2 Sides	$ 36.06	$ 36.06	$ 38.59	$ 38.59	$ 36.06	$ 38.59	$ 38.59	$ 36.06	$ 36.06	$ 50.49
WSV	WALL SKIN 11-1/4" X 42" X 1/4", Finish 2 Sides	$ 21.43	$ 21.43	$ 22.92	$ 22.92	$ 21.43	$ 22.92	$ 22.92	$ 21.43	$ 21.43	$ 30.00
SAMPLE DOORS											
SD	SAMPLE DOOR	$ 44.21	$ 44.21	$ 47.30	$ 47.30	$ 44.21	$ 50.61	$ 50.61	$ 44.21	$ 44.21	$ 57.47
ACCESSORIES											
SWB15	Single Wood Waste Bin Pull-Out w/Soft-close Slides 19.64"x21.54"	$ 525.00	$ 525.00	$ 525.00	$ 525.00	$ 525.00	$ 525.00	$ 525.00	$ 525.00	$ 525.00	$ 525.00
DWB18	Double Wood Waste Bin Pull-Out w/Soft-close Slides 19.64"x21.54"	$ 550.00	$ 550.00	$ 550.00	$ 550.00	$ 550.00	$ 550.00	$ 550.00	$ 550.00	$ 550.00	$ 550.00
TUK	Touch Up Kit	$ 40.00	$ 40.00	$ 40.00	$ 40.00	$ 40.00	$ 40.00	$ 40.00	$ 40.00	$ 40.00	$ 40.00
DRAWER INSERTS											
DPS-30	DB30 Drawer Peg System Come with 12 Pegs	$ 160.00	$ 160.00	$ 160.00	$ 160.00	$ 160.00	$ 160.00	$ 160.00	$ 160.00	$ 160.00	$ 160.00
CDI-18	B18 Cutlery Drawer Insert (Fits in B18 or DB18 Top Drawer)	$ 80.00	$ 80.00	$ 80.00	$ 80.00	$ 80.00	$ 80.00	$ 80.00	$ 80.00	$ 80.00	$ 80.00
CDI-24	B24 Cutlery Drawer Insert(Fits in B24 or DB24 Top Drawer)	$ 120.00	$ 120.00	$ 120.00	$ 120.00	$ 120.00	$ 120.00	$ 120.00	$ 120.00	$ 120.00	$ 120.00
DCDI-18	B18 Double Cutlery Drawer Insert (Fits in B18 or DB18 Top Drawer)	$ 220.00	$ 220.00	$ 220.00	$ 220.00	$ 220.00	$ 220.00	$ 220.00	$ 220.00	$ 220.00	$ 220.00
DCDI-24	B24 Double Cutlery Drawer Insert (Fits in B24 or DB24 Top Drawer)	$ 260.00	$ 260.00	$ 260.00	$ 260.00	$ 260.00	$ 260.00	$ 260.00	$ 260.00	$ 260.00	$ 260.00
KBI-21	B21 Knife Block Insert (Fits in B21 ore DB21 Top Drawer)	$ 100.00	$ 100.00	$ 100.00	$ 100.00	$ 100.00	$ 100.00	$ 100.00	$ 100.00	$ 100.00	$ 100.00
STI-18	B18 Spice Tray Insert (Fits in B18 or DB18 Top Drawer)	$ 100.00	$ 100.00	$ 100.00	$ 100.00	$ 100.00	$ 100.00	$ 100.00	$ 100.00	$ 100.00	$ 100.00
STI-24	B24 Spice Tray Insert (Fits in B24 or DB24 Top Drawer)	$ 120.00	$ 120.00	$ 120.00	$ 120.00	$ 120.00	$ 120.00	$ 120.00	$ 120.00	$ 120.00	$ 120.00

CABINET DEPOT

133 Rockingham Road
Salem , New Hampshire 03038

Toll Free+1-800-949-1451

Email: Info@Cab-Tec.com

Authorized Dealer

May 26,2026 Rev-9